# SENTINEL

## Spot Q60 ILS

**User Manual**

CHAUVET

# TABLE OF CONTENTS


**1. Before You Begin** ..... 1
- What Is Included ..... 1
- Unpacking Instructions ..... 1
- Claims ..... 1
- Text Conventions ..... 1
- Symbols ..... 1
- Safety Notes ..... 2
- FCC Statement of Compliance ..... 3
- RF Exposure Warning for North America and Australia ..... 3

**2. Introduction** ..... 4
- Product Overview ..... 4
- Product Dimensions ..... 5

**3. Setup** ..... 6
- AC Power ..... 6
  - Fuse Replacement ..... 6
  - Power Linking ..... 7
- Mounting ..... 8
  - Orientation ..... 8
  - Rigging ..... 8
- Gobo Wheels ..... 9
  - Rotating Gobo Dimensions ..... 9
  - Gobo Replacement ..... 10
    - Procedure ..... 10
    - Gobo Replacement Diagrams ..... 10

**4. Operation** ..... 11
- Control Panel Operation ..... 11
- Menu Map ..... 11
- DMX Configuration ..... 13
  - Personality and Starting Address ..... 13
  - DMX Charts ..... 14
- Standalone Configuration ..... 16
  - Automatic Programs ..... 16
  - Sound-Active Mode ..... 16
  - Manual Mode ..... 16
- Settings Configuration ..... 17
  - Pan Reverse ..... 17
  - Tilt Reverse ..... 17
  - Screen Reverse ..... 17
  - Pan Angle ..... 17
  - Tilt Angle ..... 18
  - Totem Mode ..... 18
  - Sensitivity ..... 18
  - DMX Loss ..... 18
  - Sound Loss ..... 18
  - Indicator ..... 18
  - Flash if DMX ..... 19
  - Follow Spot ..... 19
  - Reset ..... 19
  - Factory Reset ..... 19
  - Firmware Update ..... 19
  - System Information ..... 19
- IRC-6 Infrared Remote Control ..... 20
- Wired Master/Slave Mode ..... 21
- D-Fi Master/Slave Mode ..... 22

ILS Mode ..... 22
**5. Maintenance** ..... 23
Product Maintenance ..... 23
Gobo Maintenance ..... 23
**6. Technical Specifications** ..... 24
**Contact Us** ..... 25
Warranty & Returns ..... 25

# Edition Notes

The Sentinel Spot Q60 ILS User Manual includes a description, safety precautions, installation, programming, operation, and maintenance instructions for the Sentinel Spot Q60 ILS as of the release date of this edition.

## Trademarks

Chauvet, Chauvet DJ, the Chauvet logo, and Sentinel Spot are registered trademarks or trademarks of Chauvet & Sons, LLC (d/b/a Chauvet and Chauvet Lighting) in the United States and other countries. Other company and product names and logos referred to herein may be trademarks of their respective companies.

## Copyright Notice

The works of authorship contained in this manual, including, but not limited to, all designs, text, and images are owned by Chauvet.

**© Copyright 2026 Chauvet & Sons, LLC. All rights reserved.**

Electronically published by Chauvet in the United States of America.

## Manual Use

Chauvet authorizes its customers to download and print this manual for professional information purposes only. Chauvet expressly prohibits the usage, copy, storage, distribution, modification, or printing of this manual or its content for any other purpose without written consent from Chauvet.

## Document Printing

For best results, print this document in color, on letter size paper (8.5 x 11 in), double-sided. If using A4 paper (210 x 297 mm), configure the printer to scale the content accordingly.

## Intended Audience

Any person installing, operating, and/or maintaining this product should completely read through the guide that shipped with the product, as well as this manual, before installing, operating, or maintaining this product.

## Disclaimer

Chauvet believes that the information contained in this manual is accurate in all respects. However, Chauvet assumes no responsibility and specifically disclaims any and all liability to any party for any loss, damage, or disruption caused by any errors or omissions in this document, whether such errors or omissions result from negligence, accident, or any other cause. Chauvet reserves the right to revise the content of this document without any obligation to notify any person or company of such revision; however, Chauvet has no obligation to make, and does not commit to make, any such revisions.

## Document Revision

Go to www.chauvetdj.com for the latest version.

| Revision | Date | Description |
|---|---|---|
| 1 | 02/2026 | Initial release. |

# 1. Before You Begin

## What Is Included

- Sentinel Spot Q60 ILS
- Power cable
- Hanging bracket with mounting hardware
- Quick Reference Guide

## Unpacking Instructions

Carefully unpack the product immediately and check the container to make sure all the parts are in the package and are in good condition.

## Claims

If the box or the contents (the product and included accessories) appear damaged from shipping, or show signs of mishandling, notify the carrier immediately, not Chauvet. Failure to report damage to the carrier immediately may invalidate a claim. In addition, keep the box and contents for inspection.

For other issues, such as missing components or parts, damage not related to shipping, or concealed damage, file a claim with Chauvet within 7 days of delivery.

## Text Conventions

| Convention | Meaning |
|---|---|
| **1–512** | A range of values |
| **50/60** | A set of values of which only one can be chosen |
| **Settings** | A menu option not to be modified |
| **<ENTER>** | A key to be pressed on the product's control panel |
| **ON** | A value to be entered or selected |

## Symbols

| Symbol | Meaning |
|---|---|
| | Electrical warning. Not following these instructions may cause electrical damage to the product, accessories, or the user. |
| | Critical installation, configuration, or operation information. Not following these instructions may make the product not work, cause damage to the product, or cause harm to the operator. |
| | Important installation or configuration information. The product may not function correctly if this information is not used. |
| | Useful information. |

## Safety Notes

These Safety Notes include important information about installation, use, and maintenance of the Sentinel Spot Q60 ILS.

**Keep this User Manual for future use. If the product is sold to someone else, be sure that they also receive this document.**

- **ALWAYS:**
  - Connect to a grounded circuit.
  - Connect to operating voltages as specified on the product's spec sticker.
  - Disconnect from power before replacing the fuse.
  - Disconnect from its power source during periods of inactivity.
  - Use a safety cable when suspending overhead.
  - Heed all restrictions and warnings on the spec sticker.
  - Mount in a location with at least 20 in (50 cm) of ventilation.
  - Replace the fuse with the same type and rating.
  - Use a clamp with a captive bolt when a single hanging bracket is used.
- In the event of a serious operating problem, stop using immediately.
- **DO NOT:**
  - Open this product or attempt any repairs. It contains no user-serviceable parts.
  - Look at the light source when the product is on.
  - Use if the power cord is crimped or damaged.
  - Disconnect by pulling on the power cord.
  - Allow flammable materials close to the product when it is operating.
  - Touch the housing when it is on.
  - Block any ventilation holes/slots in the housing.
  - Connect to a dimmer or rheostat.
  - Carry the product by its power cord.
  - Operate in temperatures higher than 104°F (40°C).
  - Expose to environments that exceed the Ingress Protection (IP) rating.
  - Expose to rain or moisture.
  - Use outdoors.
  - Submerge.
  - Leave outdoors for extended periods of time.
  - Expose to corrosive environmental conditions such as temperature, humidity, salinity, pressure, radiation, or shock.

## FCC Statement of Compliance

This device complies with Part 15 Part B of the FCC rules. Operation is subject to the following two conditions:

1. This device may not cause harmful interference, and
2. This device must accept any interference received, including interference that may cause undesired operation.

This equipment has been tested and found to comply with the limits for a Class B digital device, pursuant to Part 15 of the FCC Rules. These limits are designed to provide reasonable protection against harmful interference in a residential installation. This equipment generates uses and can radiate radio frequency energy and, if not installed and used in accordance with the instructions, may cause harmful interference to radio communications. However, there is no guarantee that interference will not occur in a particular installation. If this equipment does cause harmful interference to radio or television reception, which can be determined by turning the equipment off and on, the user is encouraged to try to correct the interference by one or more of the following measures:

- Reorient or relocate the receiving antenna.
- Increase the separation between the equipment and receiver.
- Connect the equipment into an outlet on a circuit different from that to which the receiver is connected.
- Consult the dealer or an experienced radio/TV technician for help.

Any changes or modifications not expressly approved by the party responsible for compliance could void the user's authority to operate the equipment.

## RF Exposure Warning for North America and Australia

**Warning!** This equipment complies with FCC radiation exposure limits set forth for an uncontrolled environment. This equipment should be installed and operated with a minimum distance of 20 cm between the radiator and the user. This transmitter must not be co-located or operating in conjunction with any other antenna or transmitter.

# 2. Introduction

## Product Overview

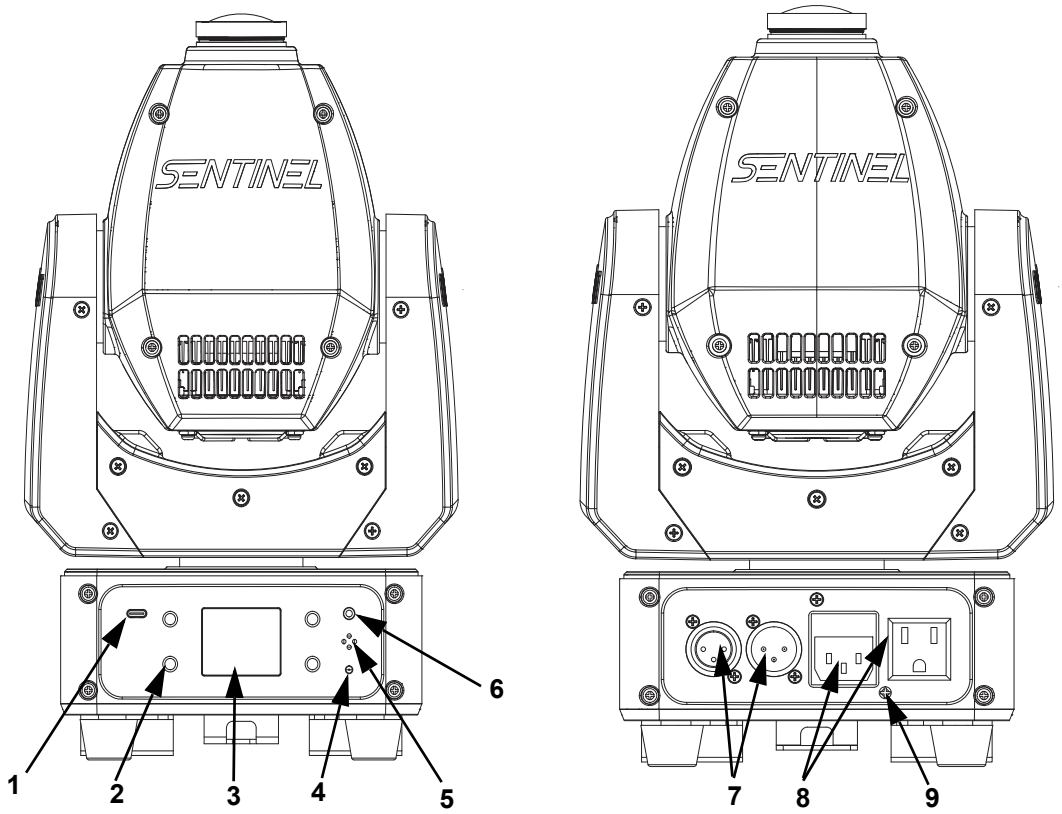


| # | Name | # | Name |
|---|---|---|---|
| 1 | USB port | 6 | IR sensor |
| 2 | Menu buttons | 7 | 3-pin DMX in/ out |
| 3 | LED Display Screen | 8 | Power in/out |
| 4 | LED indicator | 9 | Fuse |
| 5 | Microphone | | |

**WARNING! DO NOT plug anything other than a D-Fi USB into the USB type B port. Doing so may cause damage to the product.**

## Product Dimensions

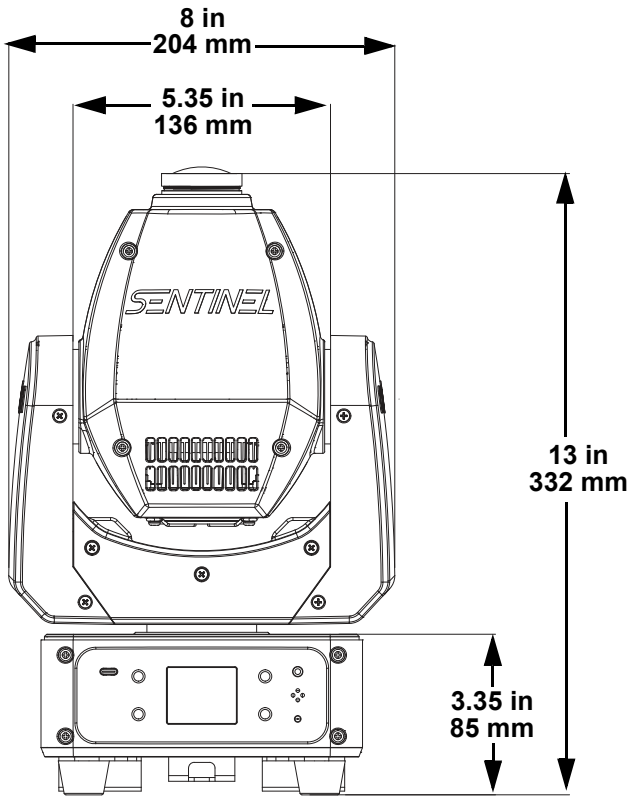


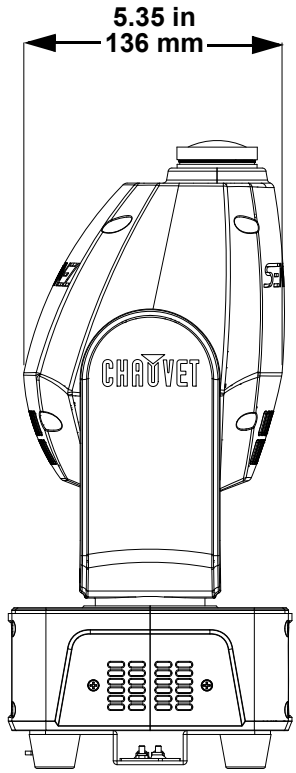


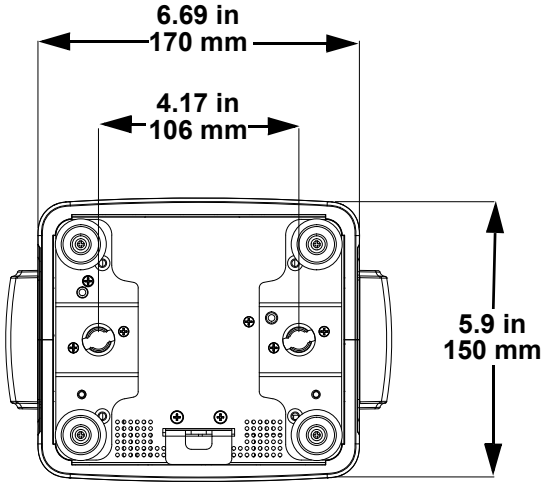

# 3. Setup

## AC Power

The Sentinel Spot Q60 ILS has an auto-ranging power supply and it can work with an input voltage range of 100 to 240 VAC, 50/60 Hz.

To determine the product's power requirements (circuit breaker, power outlet, and wiring), use the current value listed on the label affixed to the product's back panel, or refer to the product's specifications chart. The listed current rating indicates the product's average current draw under normal conditions.

- **Always connect the product to a protected circuit (a circuit breaker or fuse). Make sure the product has an appropriate electrical ground to avoid the risk of electrocution or fire.**
- **To eliminate unnecessary wear and improve its lifespan, during periods of non-use completely disconnect the product from power via breaker or by unplugging it.**

**Never connect the product to a rheostat (variable resistor) or dimmer circuit, even if the rheostat or dimmer channel serves only as a 0 to 100% switch.**

## Fuse Replacement

1. Disconnect the product from power.
2. Wedge the tip of a flat-head screwdriver into the slot of the fuse holder.
3. Pry the fuse holder out of the housing.
4. Remove the blown fuse from the holder and replace with a fuse of the exact same type and rating.
5. Insert the fuse holder back in place and reconnect power.

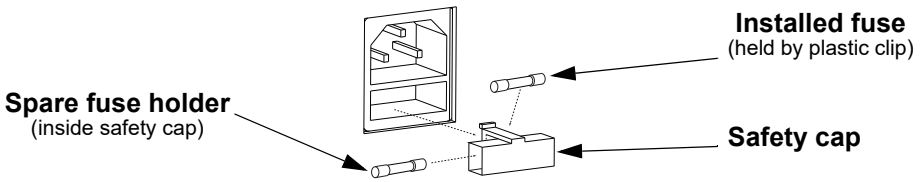


**Disconnect the product from the power outlet before replacing the fuse.**

**Always replace a blown fuse with one of the same type and rating.**

## Power Linking

This product provides power linking via the outlet located in the back of the product. See the diagram below for further explanation.

**Power Linking Diagram**

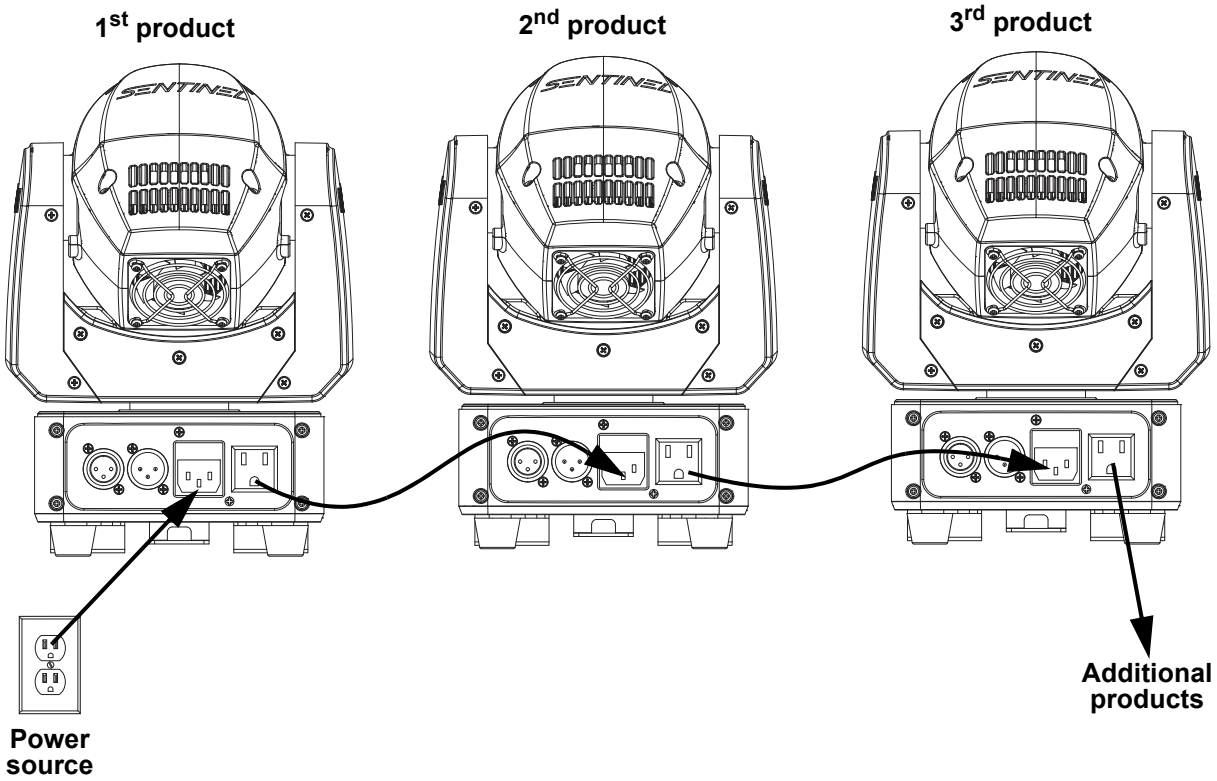


**It is possible to link up to 7 Sentinel Spot Q60 ILS products on 120 VAC or up to 11 products on 230 VAC.**

**The power linking diagram shown above corresponds to the North American version of the product ONLY! If using the product in other markets, consult with the local Chauvet distributor as power linking connectors and requirements may differ by country or region.**

# Mounting

Before mounting the product, read and follow the safety recommendations indicated in the Safety Notes.

## Orientation

The Sentinel Spot Q60 ILS may be mounted in any position; however, make sure adequate ventilation is provided around the product.

## Rigging

- Before deciding on a location for the product, always make sure there is easy access to the product for maintenance and programming.
- Make sure that the structure and attachment points can support the weight before hanging the product (see the Technical Specifications section for weight information).
- When mounting the product overhead, always use a safety cable. Mount the product securely to a rigging point, such as an elevated platform or a truss.
- When rigging the product onto a truss, use a mounting clamp of appropriate weight capacity. The bracket has a 13-mm hole, which is appropriate for this purpose.
- The bracket adjustment knobs allow for directional adjustment when aiming the product to the desired angle. Only loosen or tighten the bracket knobs manually. Using tools could damage the knobs.
- When power linking multiple products, mount the products close enough for power linking cables to reach.
- When mounting the product on the floor, make sure that the product and cables are away from people and vehicles.

**Mounting Diagram**

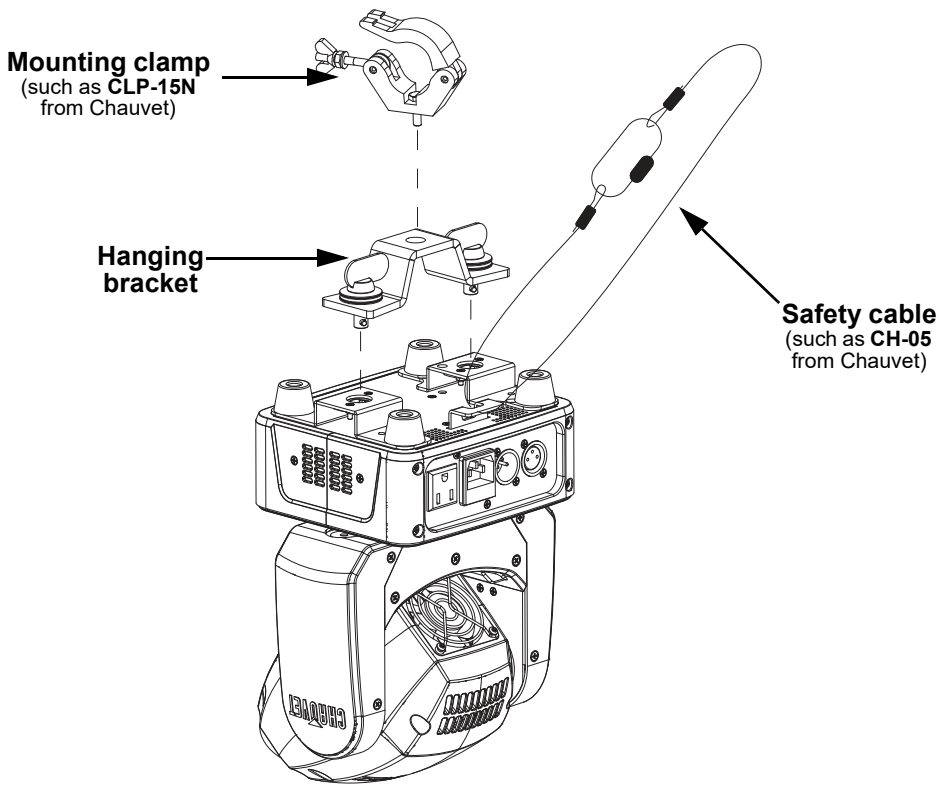


**To prevent accidental loosening when using a single mounting clamp, be sure to use a clamp with a captive bolt.**

## Gobo Wheels

## Rotating Gobo Dimensions

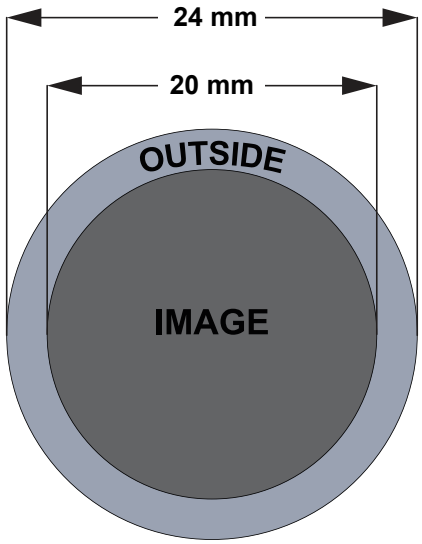

## Gobo Replacement

The gobos in the Sentinel Spot Q60 ILS are removable from their gobo holders.

- **Make sure to disconnect the product's power cable before replacing a gobo.**
- **Always replace a gobo with a gobo of the same dimensions.**
- **When inserting a glass gobo, always make sure that the shiny side of the gobo (glass base) faces the lamp. This provides a layer of protection against the high temperature from the lamp.**
- **All custom gobos in the Sentinel Spot Q60 ILS gobo wheel must be aluminum or glass.**

### Procedure

Follow the recommended procedure below to remove or replace the gobos:

1. Turn the product off and disconnect it from the power outlet.
2. Open the head cover by loosening the 4 Phillips-head ¼-turn screws on the sides of the top cover.
3. Separate the gobo holder away from the gobo wheel by pushing it toward the front of the moving head (see direction 1 in the diagram). Be careful not to push the gobo out of the gobo holder.
4. Extract the gobo holder by pulling it outward (see direction 2 in the diagram).
5. On a flat surface, remove the expansion ring that holds the gobo in place and remove the gobo from the gobo holder.
6. Insert a new gobo and hold it in place with the expansion ring.
7. Slide the tip of the gobo holder under the pressure plate near the center of the gobo wheel.
8. Push the gobo holder inwards. DO NOT force the gobo holder into the gobo wheel slot. If correctly installed, the gobo plate should easily slide itself into the gobo wheel slot.

### Gobo Replacement Diagrams

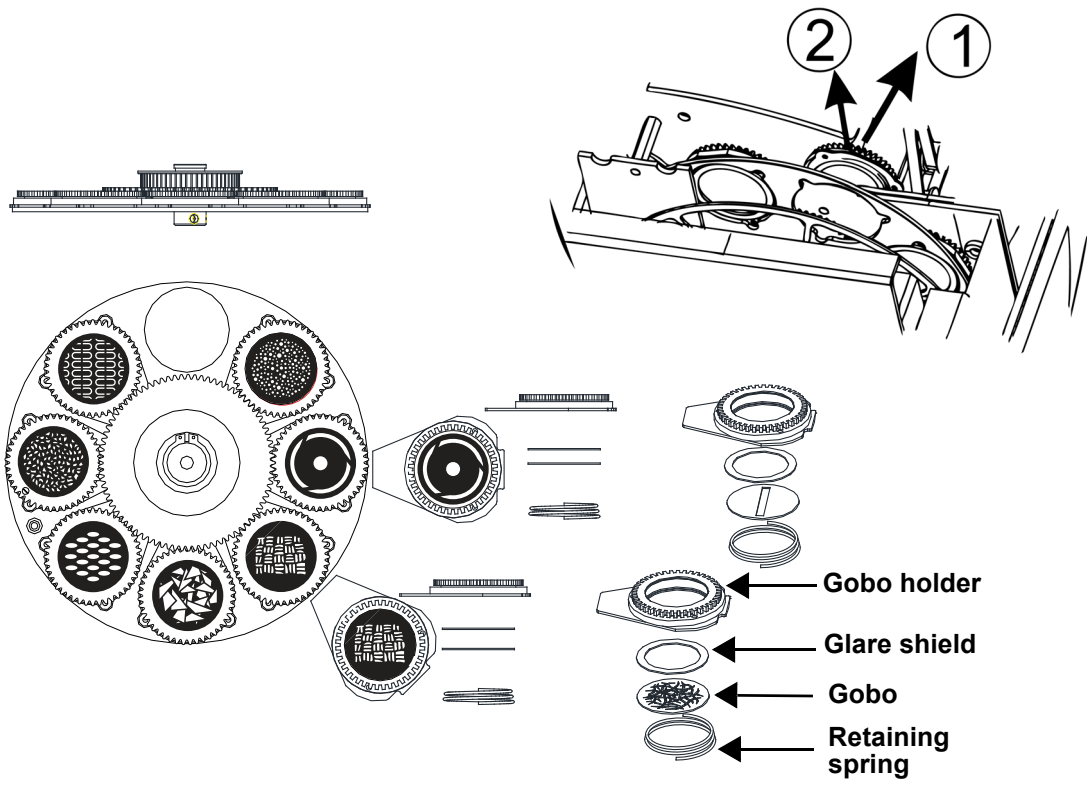


- **Gobo illustrations are for reference purposes only. Gobo designs may differ from those installed in the product.**
- **See Gobo Maintenance for instructions on how to clean the gobos and gobo holder.**

# 4. Operation

## Control Panel Operation

To access the control panel functions, use the four buttons located underneath the display. Please refer to the Product Overview to see the button locations on the control panel.

| Button | Name | Function |
|---|---|---|
| | **<MENU>** | Exits from the current menu or function |
| | **<UP>** | Navigates upwards through the menu list and increases the numeric value when in a function |
| | **<DOWN>** | Navigates downwards through the menu list and decreases the numeric value when in a function |
| | **<ENTER>** | Enables the currently displayed menu or sets the currently selected value into the selected function |

## Menu Map

Refer to the Sentinel Spot Q60 ILS product page on www.chauvetdj.com for the latest menu map and software.

| Main Level | Programming Levels | | | Description |
|---|---|---|---|---|
| **Address** | **001–512** | | | Sets the DMX starting address |
| **Run Mode** | **DMX** | **09CH** | | Selects DMX mode |
| | | **15CH** | | |
| | **Slave** | **Slave1–4** | | Selects Slave mode 1, 2, 3, or 4 |
| | **ILS** | **ILS1–2** | | Selects ILS mode |
| | **Auto** | **Speed 1–99** | | Selects Auto mode |
| | **Sound** | | | Selects Sound-Active mode |
| | **IR** | | | Selects infrared control |
| | **Manual** | **Pan** | **0–255** | Manual pan control |
| | | **Tilt** | | Manual tilt control |
| | | **Gobo** | | Manual gobo control |
| | | **GoboR** | | Manual gobo rotation control |
| | | **Strobe** | | Manual strobe control |
| | | **Red** | | Manual red control |
| | | **Green** | | Manual green control |
| | | **Blue** | | Manual blue control |
| | | **White** | | Manual white control |

| Main Level | Programming Levels | | Description |
|---|---|---|---|
| Setup | D-Fi | RX | Enables/ setsD-Fi mode |
| | | TX | |
| | | OFF | Disables D-Fi mode |
| | D-Fi Channel | 1–16 | Sets the D-Fi channel from 1-16 |
| | Pan Reverse | OFF | Normal pan operation |
| | | ON | Reverse pan operation |
| | Tilt Reverse | OFF | Normal tilt operation |
| | | ON | Reverse tilt operation |
| | Screen Reverse | OFF | Normal display |
| | | ON | Reverse display |
| | Pan Angle | 540 | Selects the 540° pan angle range |
| | | 360 | Selects the 360° pan angle range |
| | | 180 | Selects the 180° pan angle range |
| | Tilt Angle | 234 | Selects the 234° tilt angle range |
| | | 180 | Selects the 180° tilt angle range |
| | | 90 | Selects the 90° tilt angle range |
| | Totem Mode | OFF | Does not restrict the pan and tilt motion |
| | | UP | Restricts the pan and tilt motion for overhead mounting |
| | | DOWN | Restricts the pan and tilt motion for surface/ floor mounting |
| | Sensitivity | 1–100 | Sets sound sensitivity |
| | DMX Loss | Hold | Holds the last setting when signal is lost |
| | | Black | Blacks out the product when signal is lost |
| | | Auto | Sets the unit to Auto mode when signal is lost |
| | | Sound | Sets unit to Sound mode when signal is lost |
| | Sound Loss | Show | Defaults to auto program when no sound is detected |
| | | Black | Blacks out the unit when no sound is detected |
| | | Freeze | Holds last position and color when no sound is detected |
| | Indicator | OFF | Enables/disables LED indicator |
| | | ON | |
| | Flash if DMX | OFF | Enables/disables LED flash if DMX |
| | | ON | |
| | Follow Spot | OFF | Enables/disables follow spot mode |
| | | ON | |
| | Reset | NO | Keeps current settings |
| | | YES | Resets the product |
| | Factory Reset | NO | Keeps current settings |
| | | YES | Loads factory defaults |
| | Firmware Update | NO | Keeps current firmware |
| | | YES | Begins firmware update |
| Sys Info | Ver: | V_ | Displays the firmware version |
| | Running Mode: | _ _ _ _ _ | Displays the current running mode |
| | DMX Address: | _ _ _ | Displays the current DMX address |
| | Temperature: | _ _ _ | Displays the current product temperature |
| | D-Fi | | Displays the current D-Fi mode |

## DMX Configuration

The Sentinel Spot Q60 ILS works with a DMX controller. Information about DMX is in the Chauvet DMX Primer, which is available from the Chauvet website chauvetlighting.com/downloads/DMX_Primer_rev05_WO.pdf.

### Personality and Starting Address

The Sentinel Spot Q60 ILS uses 15 DMX channels in the **15CH** DMX mode, which defines the highest recommended address to **498**.

When selecting a starting DMX address, always consider the number of DMX channels the DMX mode uses. If the starting address is set too high, access to some channels could be restricted.

For information about the DMX protocol, download the DMX Primer from www.chauvetdj.com.

To select the personality:

1. Press **<MENU>**, then press **<UP>** or **<DOWN>** until **Run Mode** is highlighted on the display.
2. Press **<ENTER>**.
3. Press **<UP>** or **<DOWN>** to select **DMX**.
4. Press **<ENTER>**.
5. Use **<UP>** or **<DOWN>** to select either **09CH** or **15CH** personalities.
6. Press **<ENTER>**.

To select the starting address:

1. Press **<MENU>**, then press **<UP>** or **<DOWN>** until **Address** appears highlighted on the display.
2. Press **<ENTER>**.
3. Use **<UP>** or **<DOWN>** to select the starting address, from **001–504**.
4. Press **<ENTER>**.

## DMX Charts

| 09CH | 15CH | Function | Value | Percent/Setting |
|---|---|---|---|---|
| 1 | 1 | Pan | 000 ⇔ 255 | 0–100% |
| – | 2 | Pan fine | 000 ⇔ 255 | 0–100% |
| 2 | 3 | Tilt | 000 ⇔ 255 | 0–100% |
| – | 4 | Tilt fine | 000 ⇔ 255 | 0–100% |
| – | 5 | Pan/tilt speed | 000 ⇔ 255 | Fast to slow |
| 3 | 6 | Gobo | 000 ⇔ 009 | No function |
| | | | 010 ⇔ 023 | Gobo 1 |
| | | | 024 ⇔ 037 | Gobo 2 |
| | | | 038 ⇔ 051 | Gobo 3 |
| | | | 052 ⇔ 065 | Gobo 4 |
| | | | 066 ⇔ 079 | Gobo 5 |
| | | | 080 ⇔ 087 | Gobo 5 shake, slow to fast |
| | | | 088 ⇔ 095 | Gobo 4 shake, slow to fast |
| | | | 096 ⇔ 103 | Gobo 3 shake, slow to fast |
| | | | 104 ⇔ 111 | Gobo 2 shake, slow to fast |
| | | | 112 ⇔ 119 | Gobo 1 shake, slow to fast |
| | | | 120 ⇔ 127 | Open |
| | | | 128 ⇔ 189 | Gobo scroll, slow to fast |
| | | | 190 ⇔ 193 | Stop |
| | | | 194 ⇔ 255 | Reverse gobo scroll, slow to fast |
| 4 | 7 | Gobo rotation | 000 ⇔ 127 | Gobo indexing, clockwise |
| | | | 128 ⇔ 187 | Gobo rotation, clockwise, slow to fast |
| | | | 188 ⇔ 191 | Stop |
| | | | 192 ⇔ 255 | Gobo rotation, counterclockwise, slow to fast |
| 5 | 8 | Red | 000 ⇔ 255 | 0–100% |
| 6 | 9 | Green | 000 ⇔ 255 | 0–100% |
| 7 | 10 | Blue | 000 ⇔ 255 | 0–100% |
| 8 | 11 | White | 000 ⇔ 255 | 0–100% |
| – | 12 | Dimmer | 000 ⇔ 255 | 0–100% |
| 9 | 13 | Strobe | 000 ⇔ 003 | No function |
| | | | 004 ⇔ 007 | Open |
| | | | 008 ⇔ 076 | Strobe, slow to fast |
| | | | 077 ⇔ 145 | Pulse, slow to fast |
| | | | 146 ⇔ 215 | Random strobe, slow to fast |
| | | | 216 ⇔ 255 | Open |

| 09CH | 15CH | Function | Value | Percent/Setting |
|---|---|---|---|---|
| – | 14 | Control | 000 ⇔ 007 | No function |
| | | | 008 ⇔ 015 | Blackout on pan/tilt movement |
| | | | 016 ⇔ 023 | No function |
| | | | 024 ⇔ 031 | Blackout on gobo wheel movement |
| | | | 032 ⇔ 039 | No function |
| | | | 040 ⇔ 047 | Blackout on pan/tilt gobo wheel movement. |
| | | | 048 ⇔ 055 | No function |
| | | | 056 ⇔ 095 | No function |
| | | | 096 ⇔ 103 | Pan reset |
| | | | 104 ⇔ 111 | Tilt reset |
| | | | 112 ⇔ 119 | No function |
| | | | 120 ⇔ 127 | Gobo wheel reset |
| | | | 128 ⇔ 135 | No function |
| | | | 136 ⇔ 143 | No function |
| | | | 144 ⇔ 151 | No function |
| | | | 152 ⇔ 159 | Reset all |
| | | | 160 ⇔ 167 | No function |
| | | | 168 ⇔ 175 | No function |
| | | | 176 ⇔ 255 | No function |
| – | 15 | Auto programs | 000 ⇔ 007 | No function |
| | | | 008 ⇔ 023 | Auto program 1 |
| | | | 024 ⇔ 039 | Auto program 2 |
| | | | 040 ⇔ 055 | Auto program 3 |
| | | | 056 ⇔ 071 | Auto program 4 |
| | | | 072 ⇔ 087 | Auto program 5 |
| | | | 088 ⇔ 103 | Auto program 6 |
| | | | 104 ⇔ 119 | Auto program 7 |
| | | | 120 ⇔ 135 | Auto program 8 |
| | | | 136 ⇔ 151 | Sound-active auto program 1 |
| | | | 152 ⇔ 167 | Sound-active auto program 2 |
| | | | 168 ⇔ 183 | Sound-active auto program 3 |
| | | | 184 ⇔ 199 | Sound-active auto program 4 |
| | | | 200 ⇔ 215 | Sound-active auto program 5 |
| | | | 216 ⇔ 231 | Sound-active auto program 6 |
| | | | 232 ⇔ 247 | Sound-active auto program 7 |
| | | | 248 ⇔ 255 | Sound-active auto program 8 |

## Standalone Configuration

Set the product in one of the standalone modes to operate without a DMX controller.

**Never connect a product that is operating in any standalone mode to a DMX string connected to a DMX controller. Products in standalone mode may transmit DMX signals that could interfere with the DMX signals from the controller.**

### Automatic Programs

To run the Sentinel Spot Q60 ILS in automatic mode:

1. Press **<MENU>** and use **<UP>** or **<DOWN>** until **Run Mode** is highlighted on the display.
2. Press **<ENTER>**.
3. Use **<UP>** or **<DOWN>** to select the **Auto**.
4. Press **<ENTER>** and use **<UP>** or **<DOWN>** to select the speed for the auto program, from **1–99**.
5. Press **<ENTER>**.

### Sound-Active Mode

To run the Sentinel Spot Q60 ILS in sound-active mode:

1. Press **<MENU>** and use **<UP>** or **<DOWN>** until **Run Mode** is highlighted on the display.
2. Press **<ENTER>**.
3. Use **<UP>** or **<DOWN>** to select **Sound**.
4. Press **<ENTER>**.

**The product will only respond to low frequencies of music (bass and drums).**

### Manual Mode

To operate the Sentinel Spot Q60 ILS in manual mode:

1. Press **<MENU>**.
2. Use **<UP>** or **<DOWN>** to select **Run Mode**.
3. Press **<ENTER>**.
4. Use **<UP>** or **<DOWN>** to select **Manual**.
5. Press **<ENTER>**.
6. Use **<UP>** or **<DOWN>** to select from **Pan**, **Tilt, Gobo, GoboR, Strobe, Red, Green, Blue,** or **White**.
7. Press **<ENTER>**.
8. Use **<UP>** or **<DOWN>** to increase or decrease the value of the selected function, from **0–255**.
9. Press **<ENTER>**.
10. Repeat steps 6-9 until the product is set as desired.

# Settings Configuration

## D-Fi Setting

To activate or deactivate the D-Fi mode on the Sentinel Spot Q60 ILS:

1. Press **<MENU>** and use **<UP>** or **<DOWN>** until **Setup** is highlighted on the display.
2. Press **<ENTER>**.
3. Use **<UP>** or **<DOWN>** to select **DFI.**
4. Press **<ENTER>**.
5. Use **<UP>** or **<DOWN>** to select from **RX, TX,** or **OFF.**
6. Press **<ENTER>**.

To set the D-Fi channel on the Sentinel Spot Q60 ILS:

1. Press **<MENU>** and use **<UP>** or **<DOWN>** until **Setup** is highlighted on the display.
2. Use **<UP>** or **<DOWN>** to select **DFI Channel**.
3. Press **<ENTER>**.
4. Use **<UP>** or **<DOWN>** to set the D-Fi channel, from **1–16**.
5. Press **<ENTER>**.

## Pan Reverse

To set the pan orientation on the Sentinel Spot Q60 ILS:

1. Press **<MENU>**.
2. Use **<UP>** or **<DOWN>** to select **Setup**.
3. Press **<ENTER>**.
4. Use **<UP>** or **<DOWN>** to select **Pan Reverse**.
5. Press **<ENTER>**.
6. Use **<UP>** or **<DOWN>** to select **OFF** (normal pan orientation) or **ON** (reverse pan orientation).
7. Press **<ENTER>**.

## Tilt Reverse

To set the tilt orientation on the Sentinel Spot Q60 ILS:

1. Press **<MENU>**.
2. Use **<UP>** or **<DOWN>** to select **Setup**.
3. Press **<ENTER>**.
4. Use **<UP>** or **<DOWN>** to select **Tilt Reverse**.
5. Press **<ENTER>**.
6. Use **<UP>** or **<DOWN>** to select **OFF** (normal tilt orientation) or **ON** (reverse tilt orientation).
7. Press **<ENTER>**.

## Screen Reverse

To set the display orientation on the Sentinel Spot Q60 ILS:

1. Press **<MENU>**.
2. Use **<UP>** or **<DOWN>** to select **Setup**.
3. Press **<ENTER>**.
4. Use **<UP>** or **<DOWN>** to select **Screen Reverse**.
5. Press **<ENTER>**.
6. Use **<UP>** or **<DOWN>** to select **OFF** (normal display orientation) or **ON** (reverse display orientation).
7. Press **<ENTER>**.

## Pan Angle

To set the pan angle range on the Sentinel Spot Q60 ILS:

1. Press **<MENU>**.
2. Use **<UP>** or **<DOWN>** to select **Setup**.
3. Press **<ENTER>**.
4. Use **<UP>** or **<DOWN>** to select **Pan Angle**.
5. Press **<ENTER>**.
6. Use **<UP>** or **<DOWN>** to select from **540** (540°), **360** (360°), or **180** (180°).
7. Press **<ENTER>**.

## Tilt Angle

To set the tilt angle range on the Sentinel Spot Q60 ILS:

1. Press **<MENU>**.
2. Use **<UP>** or **<DOWN>** to select **Setup**.
3. Press **<ENTER>**.
4. Use **<UP>** or **<DOWN>** to select **Tilt Angle**.
5. Press **<ENTER>**.
6. Use **<UP>** or **<DOWN>** to select from **234** (234°), **180** (180°), or **90** (90°).
7. Press **<ENTER>**.

## Totem Mode

To activate the Totem mode:

1. Press **<MENU>**.
2. Use **<UP>** or **<DOWN>** to select **Setup**.
3. Press **<ENTER>**.
4. Use **<UP>** or **<DOWN>** to select **Totem Mode**.
5. Press **<ENTER>**.
6. Use **<UP>** or **<DOWN>** to select **OFF** (normal range of motion), **UP** (restricts the pan and tilt motion for overhead mounting), or **DOWN** (restricts the pan and tilt motion for surface/floor mounting).
7. Press **<ENTER>**.

## Sensitivity

To set the sound sensitivity on the Sentinel Spot Q60 ILS:

1. Press **<MENU>**.
2. Use **<UP>** or **<DOWN>** to select **Setup**.
3. Press **<ENTER>**.
4. Use **<UP>** or **<DOWN>** to select **Sensitivity**.
5. Press **<ENTER>**.
6. Use **<UP>** or **<DOWN>** to select from **1–100**.
7. Press **<ENTER>**.

## DMX Loss

To set the action the Sentinel Spot Q60 ILS will do when DMX signal is lost:

1. Press **<MENU>**.
2. Use **<UP>** or **<DOWN>** to select **Setup**.
3. Press **<ENTER>**.
4. Use **<UP>** or **<DOWN>** to select **DMX Loss**.
5. Press **<ENTER>**.
6. Use **<UP>** or **<DOWN>** to select **Hold** (holds the last setting), **Black** (black out the product), **Auto** (sets the unit to auto mode), or **Sound** (sets the unit to sound mode).
7. Press **<ENTER>**.

## Sound Loss

To set the action the Sentinel Spot Q60 ILS will do when sound is lost:

1. Press **<MENU>**.
2. Use **<UP>** or **<DOWN>** to select **Setup**.
3. Press **<ENTER>**.
4. Use **<UP>** or **<DOWN>** to select **Sound Loss**.
5. Press **<ENTER>**.
6. Use **<UP>** or **<DOWN>** to select **Show** (the product will default to auto program slowly), **Black** (blacks out the product), or **Freeze** (the product will freeze on the last setting).
7. Press **<ENTER>**.

## Indicator

To enable or disable the LED indicator:

1. Press **<MENU>**.
2. Use **<UP>** or **<DOWN>** to select **Setup**.
3. Press **<ENTER>**.
4. Use **<UP>** or **<DOWN>** to select **Indicator**.
5. Press **<ENTER>**.
6. Use **<UP>** or **<DOWN>** to select **OFF** (disabled) or **ON** (enabled).

## Flash if DMX

To set whether the LED indicator flashes when the fixture is connected to DMX:

1. Press **<MENU>**.
2. Use **<UP>** or **<DOWN>** to select **Setup**.
3. Press **<ENTER>**.
4. Use **<UP>** or **<DOWN>** to select **Flash if DMX**.
5. Press **<ENTER>**.
6. Use **<UP>** or **<DOWN>** to select **ON** (LED indicator flashes when fixture is connected to the DMX) or **OFF** (LED indicator does not flash when fixture is connected to the DMX).
7. Press **<ENTER>**.

## Follow Spot

To enable follow spot control of the Sentinel Spot Q60 ILS via the ILS Command:

1. Press **<MENU>** repeatedly until **Setup** is displayed.
2. Press **<ENTER>**.
3. Use **<UP>** or **<DOWN>** to select **Follow Spot**.
4. Press **<ENTER>**.
5. Use **<UP>** or **<DOWN>** to select **ON** (enables Follow Spot mode) or **OFF** (disables Follow Spot mode).
6. Press **<ENTER>**.

## Reset

To reset the Sentinel Spot Q60 ILS:

1. Press **<MENU>**.
2. Use **<UP>** or **<DOWN>** to select **Setup**.
3. Press **<ENTER>**.
4. Use **<UP>** or **<DOWN>** to select **Reset**.
5. Press **<ENTER>**.
6. Use **<UP>** or **<DOWN>** to select **NO** (disables product reset from startup) or **YES** (enables reset of all functions from startup).
7. Press **<ENTER>**.

## Factory Reset

To reset the product to factory default settings:

1. Press **<MENU>** repeatedly until **Setup** is displayed.
2. Press **<ENTER>**.
3. Use **<UP>** or **<DOWN>** to select **Factory Reset**.
4. Press **<ENTER>**.
5. Use **<UP>** or **<DOWN>** to select **YES** (enables factory reset) or **NO** (disables factory reset).

## Firmware Update

To update the product firmware to the latest factory version:

1. Press **<MENU>** repeatedly until **Setup** is displayed.
2. Press **<ENTER>**.
3. Use **<UP>** or **<DOWN>** to select **Firmware Update**.
4. Press **<ENTER>**.
5. Use **<UP>** or **<DOWN>** to select **YES** (enables the firmware update) or **NO** (disables the firmware update).

## System Information

To view the system information on the Sentinel Spot Q60 ILS:

1. Press **<MENU>**.
2. Use **<UP>** or **<DOWN>** to select **Sys Info**.
3. Press **<ENTER>.**
4. The system information includes **Ver** (displays the firmware version), **Running Mode** (displays the current running mode), **DMX Address** (displays the current DMX address), **Temperature** (displays the product temperature in °C) and **DFI** (displays the current DFI status).

## IRC-6 Infrared Remote Control

The Sentinel Spot Q60 ILS is compatible with the IRC-6 infrared remote control from Chauvet.
To enable or disable IRC-6 functionality:

1. Press **<MENU>**.
2. Use **<UP>** or **<DOWN>** to select **Run Mode.**
3. Press **<ENTER>**.
4. Use **<UP>** or **<DOWN>** to select **IR**.
5. Press **<ENTER>**.

Consult the table below to operate the Sentinel Spot Q60 ILS with the IRC-6.

| IRC-6 | Button | Function |
|---|---|---|
| 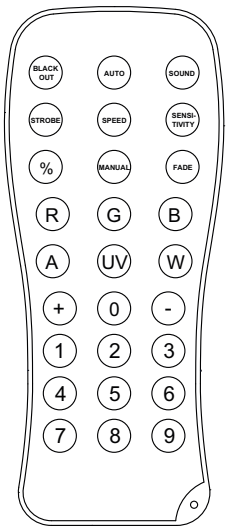 | **<AUTO>** | Press to activate automatic mode, then use **<+>** or **<->** to select a program |
| | **<SPEED>** | Press then use **<+>** or **<->** to increase or decrease speed |
| | **<SOUND>** | Press to activate sound-active mode |
| | **<SENSITIVITY** | Press then use **<+>** or **<->** to increase or decrease sensitivity |
| | **<STROBE>** | Press to toggle strobe, then use **<+>** or **<->** to increase or decrease strobe speed |
| | **<%>** | Press then use **<+>** or **<->** to increase or decrease the dimmer |
| | **<MANUAL>** | Press to toggle gobos |
| | **<R>** | Press then use **<+>** or **<->** to increase or decrease the red value |
| | **<G>** | Press then use **<+>** or **<->** to increase or decrease the green value |
| | **<B>** | Press then use **<+>** or **<->** to increase or decrease the blue value |
| | **<A>** | Press to toggle between manual pan and tilt, then use **<+>** or **<->** to increase or decrease the pan/tilt value |
| | **<UV>** | Press then use **<+>** or **<->** to increase or decrease the UV value |
| | **<W>** | Press then use **<+>** or **<->** to increase or decrease the white value |
| | **<+>** | Press to increase speed, sensitivity, or the dimmer/color value, or to scroll up the list of programs |
| | **<->** | Press to decrease speed, sensitivity, or the dimmer/color value, or to scroll down the list of programs |
| | **<0>–<9>** | Press to select an auto program |
| | **<BLACK OUT>** | Press to turn off all the lights until the button is pressed again. NOTE: The IRC-6 will not respond to any inputs when Black Out is activated. If the product does not respond when a button is pressed, try pressing **<BLACK OUT>**. Black Out may have been activated. |

- **Any setting on the IRC-6 will be saved until the system is rebooted. The system will revert to Auto Mode after reboot.**
- **The buttons on the IRC-6 not listed above are reserved for future use.**

## Wired Master/Slave Mode

The Master/Slave mode allows a single Sentinel Spot Q60 ILS product (the “master”) to control the actions of one or more Sentinel Spot Q60 ILS products (the “slaves”) without the need of a DMX controller. The master product will be set to operate in either standalone mode or with the IRC-6, while the slave products will be set to operate in slave mode. Once set and connected, the slave products will operate in unison with the master product.

Configure the products as indicated below.

**Slave products:**

1. Press **<MENU>**.
2. Use **<UP>** or **<DOWN>** to select **Run Mode.**
3. Press **<ENTER>**.
4. Use **<UP>** or **<DOWN>** to select **SLAVE.**
5. Press **<ENTER>.**
6. Use **<UP>** or **<DOWN>** to select **Slave1, Slave2, Slave3,** or **Slave4.**
7. Press **<ENTER>**.
   - Select **Slave1** for 100% synchronized actions.
   - Select **Slave2**, **Slave3**, and/or **Slave4** for delayed actions, creating a wave effect.
8. Press **<ENTER>**.
9. Connect the DMX input of the first slave product to the DMX output of the master product.
10. Connect the DMX input of the subsequent slave products to the DMX output of the previous slave product.
11. Finish setting and connecting all the slave products.

**Master product:**

1. Set the master product to operate in standalone mode or with the IRC-6.
2. Make the master product the first product in the DMX daisy chain.

- **Configure all the slave products before connecting the master to the daisy chain.**
- **Never connect a DMX controller to a DMX string configured for Master/Slave operation because the controller may interfere with the signals from the master.**
- **Do not connect more than 31 slaves to the master.**

## D-Fi Master/Slave Mode

The D-Fi Master/Slave mode allows a single Sentinel Spot Q60 ILS product (the “master”) to control the actions of one or more Sentinel Spot Q60 ILS products (the “slaves”) without the need of a DMX controller. The master product will be set to operate in Standalone, whereas the slave products will be set to operate in Slave mode. Once set and connected, the slave products will operate in unison with the master product. Configure the products as indicated below.

**Slave products:**

1. Press **<MENU>** repeatedly until **Setup** shows on the display.
2. Press **<ENTER>**.
3. Use **<UP>** or **<DOWN>** to select **DFI**.
4. Press **<ENTER>**.
5. Use **<UP>** or **<DOWN>** to select **RX**, then press **<ENTER>**.
6. Use **<UP>** or **<DOWN>** to select the receiving **DFI Channel** from **1–16**.
7. Press **<ENTER>**.
8. Press **<MENU>** repeatedly until **Run Mode** shows on the display. Press **<ENTER>**.
9. Use **<UP>** or **<DOWN>** to select **Slave**. Press **<ENTER>**.
10. Use **<UP>** or **<DOWN>** to select the slave unit(s) from **Slave1–4**. Press **<ENTER>**.
11. Press **<ENTER>**.
12. Finish setting and connecting all the slave products.

**Master product:**

1. Press **<MENU>** repeatedly until **Setup** shows on the display.
2. Press **<ENTER>**.
3. Use **<UP>** or **<DOWN>** to select **DFI**.
4. Press **<ENTER>**.
5. Use **<UP>** or **<DOWN>** to select **TX**, then press **<ENTER>**.
6. Use **<UP>** or **<DOWN>** to select the transmitting **DFI Channel** to be the same as on the receiving products from **1–16.**
7. Press **<ENTER>**.

- **All products must be set to the same D-Fi channel.**
- **Configure all the slave products before configuring the master to transmit.**
- **Never connect a DMX controller to a D-Fi channel configured for Master/Slave operation because the controller may interfere with the signals from the master.**

## ILS Mode

ILS (Integrated Lighting System) provides 4 modes that synchronize with the GigBAR MOVE+ILS: Modes 1 and 3 synchronize with side 1 of the GigBAR MOVE+ILS, whereas modes 2 and 4 synchronize with side 2 of the GigBAR MOVE+ILS. When linked, effects will sync with the most similar effect on the selected side of the GigBAR MOVE+ILS: Kinta effects will sync with one of the kintas, moving heads will sync with one of the moving heads, and wash effects will sync with one of the pars. Laser effects will sync with the laser, and strobe effects will sync with the strobe effects regardless of ILS mode.

This product will synchronize with the strobe effect on the selected side of the GigBAR MOVE+ILS, as well as the laser and strobes.

To set the Sentinel Spot Q60 ILS to respond to an ILS signal:

1. Press **<MENU>**.
2. Use **<UP>** or **<DOWN>** to select **Run Mode** then press **<ENTER>.**
1. Use **<UP>** or **<DOWN>** to select **ILS**.
2. Press **<ENTER>**.
3. Use **<UP>** or **<DOWN>** to select from **ILS1** (side 1) or **ILS2** (side 2).
4. Press **<ENTER>**.

# 5. Maintenance

## Product Maintenance

Dust build-up reduces light output performance and can cause overheating. This can lead to reduction of the light source's life and/or mechanical wear. To maintain optimum performance and minimize wear, clean all lighting products at least twice a month. However, be aware that usage and environmental conditions could be contributing factors to increase the cleaning frequency.

To clean the product, follow the instructions below:

1. Unplug the product from power.
2. Wait until the product is at room temperature.
3. Use a vacuum (or dry compressed air) and a soft brush to remove dust collected on the external surface/vents.
4. Clean all transparent surfaces with a mild soap solution, ammonia-free glass cleaner, or isopropyl alcohol.
5. Apply the solution directly to a soft, lint free cotton cloth or a lens cleaning tissue.
6. Softly drag any dirt or grime to the outside of the transparent surface.
7. Gently polish the transparent surfaces until they are free of haze and lint.

**Always dry the transparent surfaces carefully after cleaning them.**

**Do not spin the cooling fans using compressed air because they could be damaged.**

## Gobo Maintenance

To ensure optimal operation, 1) inspect and 2) clean gobos every four months. More frequent maintenance may be necessary if usage is higher.

To inspect, remove each gobo holder and check if:

- the holders are clean (free of dirt, grime, or gunk).
- the gobos are properly installed in the holders.
- all the bearings are in place.
- the holders are rotating freely.

To clean the gobos and the gobo holder, follow the instructions below:

1. Remove the gobos from the holder.
2. Clean the gobos with a soft, lint-free cotton cloth. Use an ammonia-free glass cleaner sprayed to a piece of lint-free cotton cloth to clean glass gobos.
3. Submerge the gobo holder (without the gobo installed) in a container with a liquid lubricant (i.e., WD40) and let it rest for a couple of minutes.
4. Shake the container with the gobo holder inside to help release/loosen any gunk/grime/dirt.
5. Take the gobo holder out of the container and clean it using a small nylon brush.
6. Wipe off all the lubricant from the gobo holder using a piece of lint-free cotton cloth.
7. Apply a small coat of synthetic oil (i.e., Liquid Bearings) to the bearings and rotate it thoroughly in both directions (needle tip applier recommended). Make sure the gobo holder is rotating freely and is not making any abnormal noise.
8. Reinstall the gobos in the gobo holder. Make sure the gobos are in the correct positions.
9. Reinstall the gobo holder in the unit.

# 6. Technical Specifications

**Dimensions and Weight**

| Length | Width | Height | Weight |
|---|---|---|---|
| 8 in (204 mm) | 5.9 in (150 mm) | 13 in (332 mm) | 9 lb (4.1 kg) |

**Note:** Dimensions in inches are rounded.

**Power**

| Power Supply Type | Range | Voltage Selection |
|---|---|---|
| Switching (internal) | 100 to 240 VAC, 50/60 Hz | Auto-ranging |

| Parameter | 120 V, 60 Hz | 230 V, 50 Hz |
|---|---|---|
| Consumption | 76 W | 76 W |
| Operating Current | 1 A | 0.7 A |
| Power linking current (products) | 8 A (7 products) | 8 A (11 products) |
| Fuse | T2 A, 250 V | T2 A, 250 V |

| Power I/O | U.S./Worldwide | UK/Europe |
|---|---|---|
| Power input connector | IEC | IEC |
| Power output connector | Edison | IEC |
| Power cable plug | Edison (U.S.) | Local Plug |

**Light Source**

| Type | Color | Quantity | Power | Current | Lifespan |
|---|---|---|---|---|---|
| LED | Quad-color RGBW | 1 | 60 W | 4.4 A | 50,000 hours |

**Photometrics**

| Strobe Rate | Beam Angle | Illuminance @ 2 m |
|---|---|---|
| 0 to 20 Hz° | 12° | 8,687° lux |

**Thermal**

| Maximum External Temperature | Cooling System |
|---|---|
| 104 °F (40 °C) | Convection |

**DMX**

| I/O Connector | Channel Range |
|---|---|
| 3-pin XLR | 9 or 15 |

**Ordering**

| Product Name | Item Code | UPC Number |
|---|---|---|
| Sentinel Spot Q60 ILS | 10012699 | 7814622230470 |

RoHS

# Contact Us

| General Information | Technical Support |
|---|---|
| **Chauvet World Headquarters** | |
| Address: 3360 Davie Rd., Suite 509<br>Davie, FL 33314<br>Voice: (954) 577-4455<br>Fax: (954) 929-5560<br>Toll Free: (800) 762-1084 | Voice: (844) 393-7575<br>Fax: (954) 756-8015<br>Email: chauvetcs@chauvetlighting.com<br><br>Website: www.chauvetdj.com |
| **Chauvet U.K.** | |
| Address: Pod 1 EVO Park<br>Little Oak Drive, Sherwood Park<br>Nottinghamshire, NG15 0EB<br>UK<br>Voice: +44 (0) 1773 511115<br>Fax: +44 (0) 1773 511110 | Email: UKtech@chauvetlighting.eu<br><br>Website: www.chauvetdj.eu |
| **Chauvet Benelux** | |
| Address: Vaartlaan 9<br>9800 Deinze<br>Belgium<br>Voice: +32 9 388 93 97 | Email: BNLtech@chauvetlighting.eu<br><br>Website: www.chauvetdj.eu |
| **Chauvet France** | |
| Address: 3, Rue Ampère<br>91380 Chilly-Mazarin<br>France<br>Voice: +33 1 78 85 33 59 | Email: FRtech@chauvetlighting.fr<br><br>Website: www.chauvetdj.eu |
| **Chauvet Germany** | |
| Address: Bruno-Bürgel-Str. 11<br>28759 Bremen<br>Germany<br>Voice: +49 421 62 60 20 | Email: DEtech@chauvetlighting.de<br><br>Website: www.chauvetdj.eu |
| **Chauvet Mexico** | |
| Address: Av. de las Partidas 34 - 3B<br>(Entrance by Calle 2)<br>Zona Industrial Lerma<br>Lerma, Edo. de México, CP 52000<br>Voice: +52 (728) 690-2010 | Email: servicio@chauvet.com.mx<br><br>Website: www.chauvetdj.mx |

## Warranty & Returns

**For warranty terms and conditions and return information, please visit our website.**
For customers in the United States and Mexico: www.chauvetlighting.com/warranty-registration.
For customers in the United Kingdom, Republic of Ireland, Belgium, the Netherlands, Luxembourg, France, and Germany: www.chauvetlighting.eu/warranty-registration.