SENTINEL
Wash Q120

User Manual

CHAUVET

Edition Notes

The Sentinel Wash Q120 User Manual includes a description, safety precautions, installation, programming, operation, and maintenance instructions for the Sentinel Wash Q120 as of the release date of this edition.

Trademarks

Chauvet, Chauvet DJ, the Chauvet logo, and Sentinel Wash are registered trademarks or trademarks of Chauvet & Sons, LLC (d/b/a Chauvet and Chauvet Lighting) in the United States and other countries. Other company and product names and logos referred to herein may be trademarks of their respective companies.

Copyright Notice

The works of authorship contained in this manual, including, but not limited to, all designs, text, and images are owned by Chauvet.

© Copyright 2025 Chauvet & Sons, LLC. All rights reserved.

Electronically published by Chauvet in the United States of America.

Manual Use

Chauvet authorizes its customers to download and print this manual for professional information purposes only. Chauvet expressly prohibits the usage, copy, storage, distribution, modification, or printing of this manual or its content for any other purpose without written consent from Chauvet.

Document Printing

For best results, print this document in color, on letter size paper (8.5 x 11 in), double-sided. If using A4 paper (210 x 297 mm), configure the printer to scale the content accordingly.

Intended Audience

Any person installing, operating, and/or maintaining this product should completely read through the guide that shipped with the product, as well as this manual, before installing, operating, or maintaining this product.

Disclaimer

Chauvet believes that the information contained in this manual is accurate in all respects. However, Chauvet assumes no responsibility and specifically disclaims any and all liability to any party for any loss, damage, or disruption caused by any errors or omissions in this document, whether such errors or omissions result from negligence, accident, or any other cause. Chauvet reserves the right to revise the content of this document without any obligation to notify any person or company of such revision; however, Chauvet has no obligation to make, and does not commit to make, any such revisions.

Document Revision

Go to www.chauvetdj.com for the latest version.

Revision	Date	Description
1	11/2025	Initial release.

TABLE OF CONTENTS

1. Before You Begin 1
- What Is Included 1
- Unpacking Instructions 1
- Claims 1
- Text Conventions 1
- Symbols 1
- Safety Notes 2

2. Introduction 3
- Product Overview 3
- Product Dimensions 4

3. Setup 5
- AC Power 5
  - Fuse Replacement 5
  - Power Linking 6
- Mounting 7
  - Orientation 7
  - Rigging 7

4. Operation 8
- Control Panel Operation 8
- Menu Map 8
- DMX Configuration 9
  - Personality and Starting Address 9
- DMX Channel Assignments and Values 10
  - 14CH / 10CH 10
- Standalone Configuration 11
  - Automatic Programs 11
  - Sound-Active Mode 11
  - Sound Sensitivity 11
  - Manual Mode 11
- Settings Configuration 12
  - Pan Reverse 12
  - Tilt Reverse 12
  - Pan Angle 12
  - Tilt Angle 12
  - Totem Mode 12
  - Signal Loss 12
  - Reset 13
  - Factory Reset 13
  - System Information 13
- IRC-6 Infrared Remote Control 14
- Wired Master/Slave Mode 15

5. Maintenance 16
- Product Maintenance 16

6. Technical Specifications 17

Contact Us 18
- Warranty & Returns 18

1. Before You Begin

What Is Included

- Sentinel Wash Q120
- Power cable
- Hanging bracket
- Quick Reference Guide

Unpacking Instructions

Carefully unpack the product immediately and check the container to make sure all the parts are in the package and are in good condition.

Claims

If the box or the contents (the product and included accessories) appear damaged from shipping, or show signs of mishandling, notify the carrier immediately, not Chauvet. Failure to report damage to the carrier immediately may invalidate a claim. In addition, keep the box and contents for inspection.

For other issues, such as missing components or parts, damage not related to shipping, or concealed damage, file a claim with Chauvet within 7 days of delivery.

Text Conventions

Convention	Meaning
1–512	A range of values
50/60	A set of values of which only one can be chosen
Settings	A menu option not to be modified
<ENTER>	A key to be pressed on the product's control panel
ON	A value to be entered or selected

Symbols

Symbol	Meaning
	Electrical warning. Not following these instructions may cause electrical damage to the product, accessories, or the user.
	Critical installation, configuration, or operation information. Not following these instructions may make the product not work, cause damage to the product, or cause harm to the operator.
	Important installation or configuration information. The product may not function correctly if this information is not used.
	Useful information.

Safety Notes

These Safety Notes include important information about installation, use, and maintenance of the Sentinel Wash Q120.

- **ALWAYS:**
  - Connect to a grounded circuit.
  - Connect to operating voltages as specified on the product's spec sticker.
  - Disconnect from power before replacing the fuse.
  - Disconnect from its power source during periods of inactivity.
  - Use a safety cable when suspending overhead.
  - Heed all restrictions and warnings on the spec sticker.
  - Mount in a location with at least 20 in (50 cm) of ventilation.
  - Replace the fuse with the same type and rating.
  - Use a clamp with a captive bolt when a single hanging bracket is used.
- In the event of a serious operating problem, stop using immediately.
- **DO NOT:**
  - Open this product or attempt any repairs. It contains no user-serviceable parts.
  - Look at the light source when the product is on.
  - Use if the power cord is crimped or damaged.
  - Disconnect by pulling on the power cord.
  - Allow flammable materials close to the product when it is operating.
  - Touch the housing when it is on.
  - Block any ventilation holes/slots in the housing.
  - Connect to a dimmer or rheostat.
  - Carry the product by its power cord.
  - Operate in temperatures higher than 104°F (40°C).
  - Expose to environments that exceed the Ingress Protection (IP) rating.
  - Expose to rain or moisture.
  - Use outdoors.
  - Submerge.

Keep this User Manual for future use. If the product is sold to someone else, be sure that they also receive this document.

2. Introduction

Product Overview

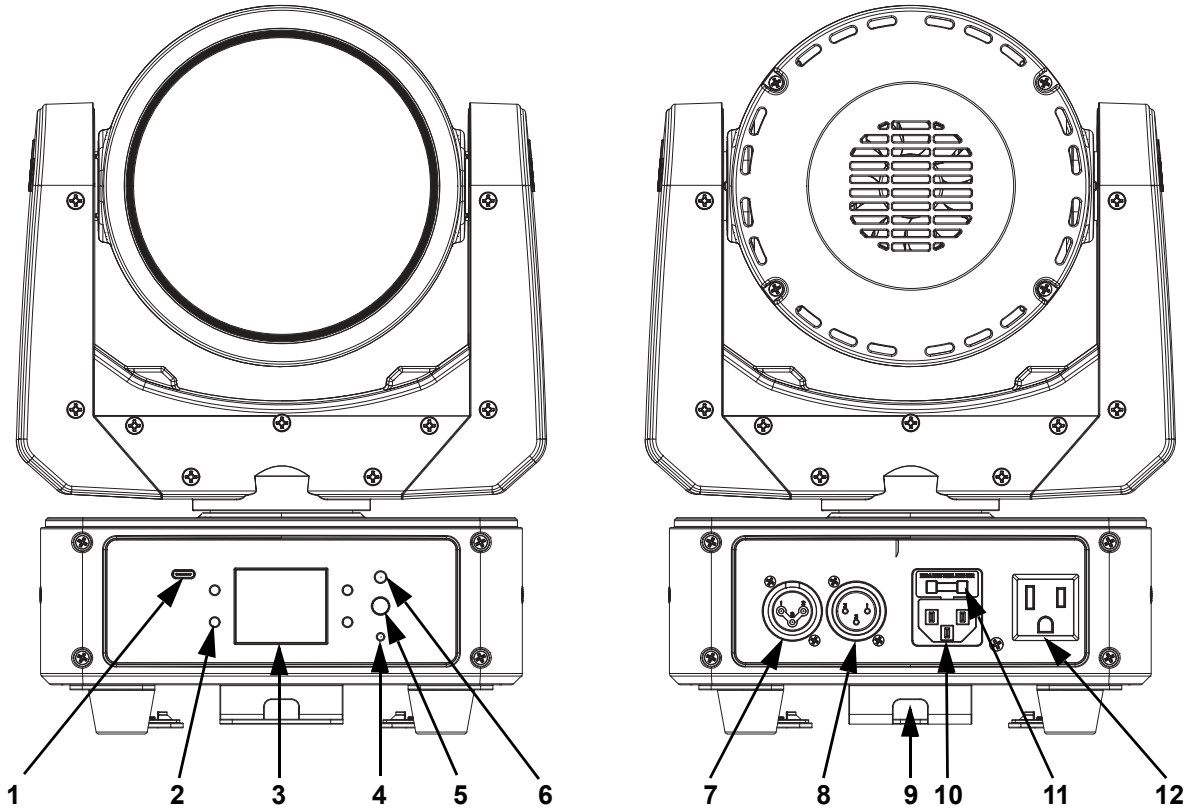

#	Name	#	Name
1	USB port	**7**	DMX in
2	Menu buttons	**8**	DMX out
3	Display	**9**	Safety cable pass-through
4	DMX signal indicator LED	**10**	Power in
5	Mic	**11**	Fuse holder
6	IR receiver	**12**	Power out

WARNING! DO NOT plug anything other than a D-Fi USB into the USB type B port. Doing so may cause damage to the product.

Product Dimensions

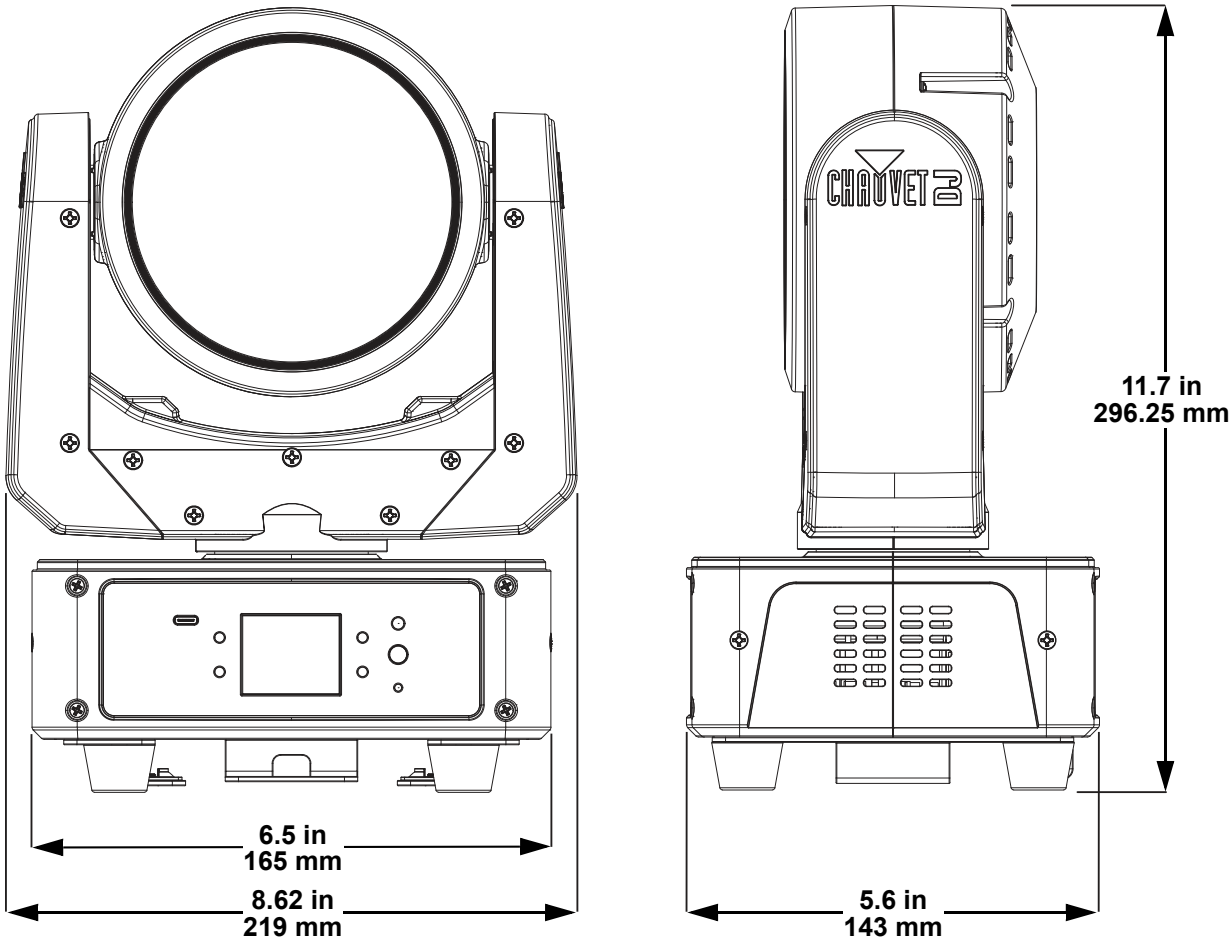

3. Setup

AC Power

The Sentinel Wash Q120 has an auto-ranging power supply and it can work with an input voltage range of 100 to 240 VAC, 50/60 Hz.

To determine the product's power requirements (circuit breaker, power outlet, and wiring), use the current value listed on the label affixed to the product's back panel, or refer to the product's specifications chart. The listed current rating indicates the product's average current draw under normal conditions.

- **Always connect the product to a protected circuit (a circuit breaker or fuse). Make sure the product has an appropriate electrical ground to avoid the risk of electrocution or fire.**
- **To eliminate unnecessary wear and improve its lifespan, during periods of non-use completely disconnect the product from power via breaker or by unplugging it.**

Never connect the product to a rheostat (variable resistor) or dimmer circuit, even if the rheostat or dimmer channel serves only as a 0 to 100% switch.

Fuse Replacement

1. Disconnect the product from power.
2. Wedge the tip of a flat-head screwdriver into the slot of the fuse holder.
3. Pry the fuse holder out of the housing.
4. Remove the blown fuse from the holder and replace with a fuse of the exact same type and rating.
5. Insert the fuse holder back in place and reconnect power.

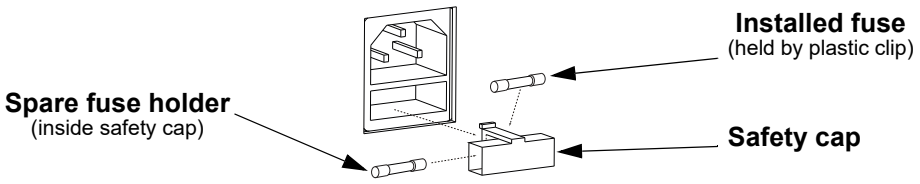

Disconnect the product from the power outlet before replacing the fuse.

Always replace a blown fuse with one of the same type and rating.

Power Linking

This product provides power linking via the outlet located in the back of the product. See the diagram below for further explanation.

Power Linking Diagram

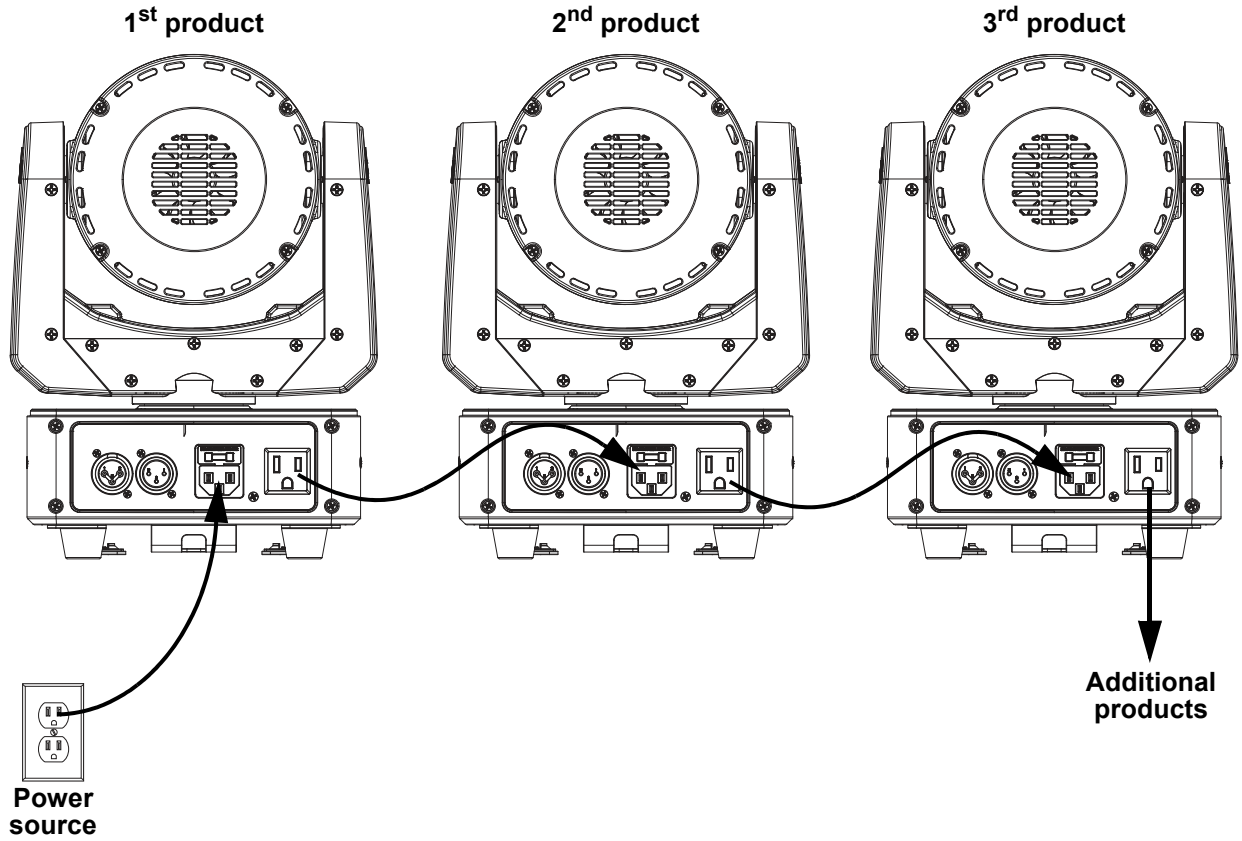

It is possible to link up to 3 Sentinel Wash Q120 products on 120 VAC or up to 5 products on 230 VAC.

The power linking diagram shown above corresponds to the North American version of the product ONLY! If using the product in other markets, consult with the local Chauvet distributor as power linking connectors and requirements may differ by country or region.

Mounting

Before mounting the product, read and follow the safety recommendations indicated in the Safety Notes.

Orientation

The Sentinel Wash Q120 may be mounted in any position; however, make sure adequate ventilation is provided around the product.

Rigging

- Before deciding on a location for the product, always make sure there is easy access to the product for maintenance and programming.
- Make sure that the structure and attachment points can support the weight before hanging the product (see the Technical Specifications section for weight information).
- When mounting the product overhead, always use a safety cable. Mount the product securely to a rigging point, such as an elevated platform or a truss.
- When rigging the product onto a truss, use a mounting clamp of appropriate weight capacity. The bracket has a 13-mm hole, which is appropriate for this purpose.
- The bracket adjustment knobs allow for directional adjustment when aiming the product to the desired angle. Only loosen or tighten the bracket knobs manually. Using tools could damage the knobs.
- When power linking multiple products, mount the products close enough for power linking cables to reach.
- When mounting the product on the floor, make sure that the product and cables are away from people and vehicles.

Mounting Diagram

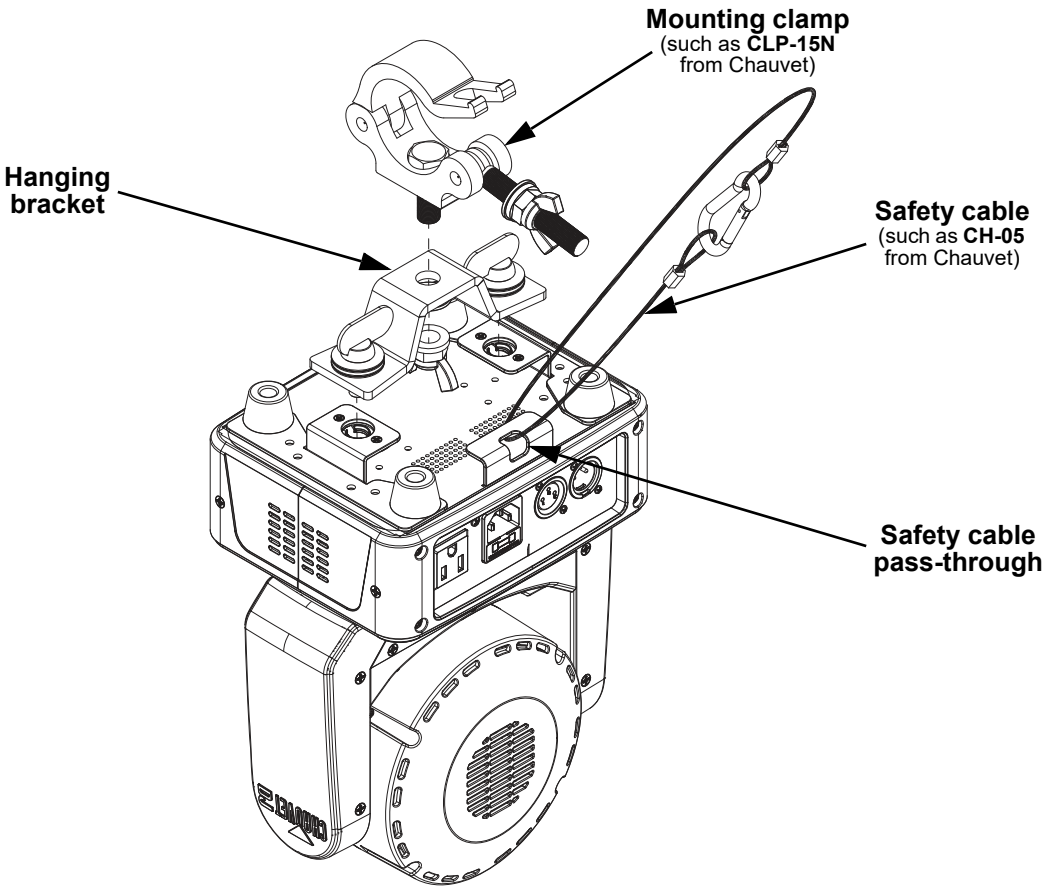

To prevent accidental loosening when using a single mounting clamp, be sure to use a clamp with a captive bolt.

4. Operation

Control Panel Operation

To access the control panel functions, use the four buttons located underneath the display. Please refer to the Product Overview to see the button locations on the control panel.

Button	Function
<MENU>	Press to find an operation mode or to back out of the current menu option
<UP>	Press to scroll up the list of options or to find a higher value
<DOWN>	Press to scroll down the list of options or to find a lower value
<ENTER>	Press to activate a menu option or a selected value

Menu Map

Refer to the Sentinel Wash Q120 product page on www.chauvetdj.com for the latest menu map and software.

Main Level	Programming Levels			Description
Address	**001–512**			Sets the DMX starting address
Run Mode	**DMX**	**10CH**		Selects DMX mode
		14CH		
	Slave			Selects Slave mode 1, 2, 3, or 4
	Auto			Selects Auto mode
	Sound			Selects Sound-Active mode
	IR			Selects infrared control
	Manual	**Pan**	**000–255**	Manual pan control
		Pan Fine		Fine manual pan control
		Tilt		Manual tilt control
		Tilt Fine		Fine manual tilt control
		Strobe		Virtual shutter control
		Dimmer		Manual dimmer control
		Color Macro		Virtual color wheel control
		Red		Manual red control
		Green		Manual green control
		Blue		Manual blue control
		White		Manual white control
Setup	**Pan Reverse**		**OFF**	Normal pan operation
			ON	Reverse pan operation
	Tilt Reverse		**OFF**	Normal tilt operation
			ON	Reverse tilt operation
	Pan Angle		**540**	Selects the 540° pan angle range
			360	Selects the 360° pan angle range
			180	Selects the 180° pan angle range
	Tilt Angle		**270**	Selects the 270° tilt angle range
			180	Selects the 180° tilt angle range
			90	Selects the 90° tilt angle range
	Totem Mode		**OFF**	Restricts tilt motion for surface/floor mounting
			ON	
	Sensitivity		**001–100**	Sets sound sensitivity

Main Level	Programming Levels		Description
Setup (cont.)	**Signal Loss**	**HOLD**	Holds the last setting when signal is lost
		CLEAR	Blacks out the product when signal is lost
		SOUND	Sets the unit to Sound mode when signal is lost
		AUTO	Sets the unit to Auto mode when signal is lost
	Reset		Resets the product
	Factory Set		Loads factory defaults
Sys Info	**Ver:**	**V1.03**	Displays the firmware version
	Run Mode:	**_ _ _ _ _**	Displays the current running mode
	Dmx Address:	**_ _ _**	Displays the current DMX address
	Temperature:	**_ _ _**	Displays the current product temperature

DMX Configuration

The Sentinel Wash Q120 works with a DMX controller. Information about DMX is in the Chauvet DMX Primer, which is available from the Chauvet website chauvetlighting.com/downloads/DMX_Primer_rev05_WO.pdf.

Personality and Starting Address

The Sentinel Wash Q120 uses up to 14 DMX channels in the **14CH** DMX mode, which defines the highest configurable/recommended address to **499**.

When selecting a starting DMX address, always consider the number of DMX channels the DMX mode uses. If the starting address is set too high, access to some channels could be restricted.

For information about the DMX protocol, download the DMX Primer from www.chauvetdj.com.

To select the personality:

1. Press **<MENU>**, then **<DOWN>** until **Run Mode** shows on the display.
2. Press **<ENTER>** to select **Run Mode**.
3. Press **<ENTER>** to select **DMX**.
4. Use **<UP>** or **<DOWN>** to select between the **10CH** and **14CH** personalities.
5. Press **<ENTER>**.

To select the starting address:

1. Press **<MENU>** until **Address** shows on the display.
2. Press **<ENTER>** to select **Address**.
3. Use **<UP>** or **<DOWN>** to select a starting address, **001–499**.
4. Press **<ENTER>**.

DMX Channel Assignments and Values

10CH / 14CH

10CH	14CH	Function	Value	Percent/Setting
1	1	Pan	000 ⇔ 255	0–540°
–	2	Pan Fine	000 ⇔ 255	Fine control of panning
2	3	Tilt	000 ⇔ 255	0–270°
–	4	Tilt Fine	000 ⇔ 255	Fine control of tilting
3	5	Red	000 ⇔ 255	0–100%
4	6	Green	000 ⇔ 255	0–100%
5	7	Blue	000 ⇔ 255	0–100%
6	8	White	000 ⇔ 255	0–100%
7	9	Auto Program	000 ⇔ 225	Activates auto program mode
		Sound Mode	226 ⇔ 255	Activates sound-active program mode
8	10	Auto Speed	000 ⇔ 255	Adjust auto program speed
		Sound Sensitivity	000 ⇔ 255	Adjust sound-active program speed
9	11	Strobe	000 ⇔ 010	No function
			011 ⇔ 127	Strobe effect (slow to fast)
			128 ⇔ 245	Random strobe effect (slow to fast)
			246 ⇔ 255	No function (shutter open)
10	12	Dimmer	000 ⇔ 255	0–100%
–	13	Virtual Color	000 ⇔ 019	Color Temperature 2000K–2700K
			020 ⇔ 039	White 3200K
			040 ⇔ 059	White 4200K
			060 ⇔ 079	White 5600K
			080 ⇔ 099	White 8000K
			100 ⇔ 255	Rainbow color macro effect
–	14	Control	000 ⇔ 007	No function
			008 ⇔ 015	Reset all
			016 ⇔ 023	Pan and tilt blackout **On** (5 sec delay)
			024 ⇔ 031	Pan and tilt blackout **Off** (5 sec delay)
			032 ⇔ 039	Sound active pan and tilt **On** (5 sec delay)
			040 ⇔ 047	Sound active pan and tilt **Off** (5 sec delay)
			048 ⇔ 055	Sound active color **On** (5 sec delay)
			056 ⇔ 063	Sound active color **Off** (5 sec delay)
			064 ⇔ 071	Display off
			072 ⇔ 079	Display on
			080 ⇔ 087	Auto fan speed (temperature responsive)
			088 ⇔ 095	Full fan speed (fan at 100%)
			096 ⇔ 103	Dimmer mode (off)
			104 ⇔ 111	Dimmer mode (slow)
			112 ⇔ 119	Dimmer mode (medium)
			120 ⇔ 127	Dimmer mode (fast)
			128 ⇔ 255	No function

Standalone Configuration

Set the product in one of the standalone modes to operate without a DMX controller.

Never connect a product that is operating in any standalone mode to a DMX string connected to a DMX controller. Products in standalone mode may transmit DMX signals that could interfere with the DMX signals from the controller.

Automatic Programs

To run the Sentinel Wash Q120 in automatic mode:

1. Press **<MENU>**.
2. Use **<UP>** or **<DOWN>** to select **Run Mode**.
3. Press **<ENTER>**.
4. Use **<UP>** or **<DOWN>** to select **Auto**.
5. Press **<ENTER>**.

Sound-Active Mode

To run the Sentinel Wash Q120 in sound-active mode:

1. Press **<MENU>**.
2. Use **<UP>** or **<DOWN>** to select **Run Mode**.
3. Press **<ENTER>**.
4. Use **<UP>** or **<DOWN>** to select **Sound**.
5. Press **<ENTER>**.

Sound Sensitivity

To set the sound sensitivity on the Sentinel Wash Q120:

1. Press **<MENU>**.
2. Use **<UP>** or **<DOWN>** to select **Setup**.
3. Press **<ENTER>**.
4. Use **<UP>** or **<DOWN>** to select **Sensitivity**.
5. Press **<ENTER>**.
6. Use **<UP>** or **<DOWN>** to increase or decrease the sound sensitivity, from **001–100**.
7. Press **<ENTER>**.

The product will only respond to low frequencies of music (bass and drums).

Manual Mode

To operate the Sentinel Wash Q120 manually through the menu:

1. Press **<MENU>**.
2. Use **<UP>** or **<DOWN>** to select **Run Mode**.
3. Press **<ENTER>**.
4. Use **<UP>** or **<DOWN>** to select **Manual**.
5. Press **<ENTER>**.
6. Use **<UP>** or **<DOWN>** to select from **Pan**, **Pan Fine, Tilt, Tilt Fine, Strobe, Dimmer, Color Macro, Red, Green, Blue,** or **White**.
7. Press **<ENTER>**.
8. Use **<UP>** or **<DOWN>** to increase or decrease the value of the selected function, from **000–255**.
9. Press **<ENTER>**.
10. Repeat steps 6-9 until the product is set as desired.

Settings Configuration

Pan Reverse

To set the pan orientation on the Sentinel Wash Q120:

1. Press **<MENU>**.
2. Use **<UP>** or **<DOWN>** to select **Setup**.
3. Press **<ENTER>**.
4. Use **<UP>** or **<DOWN>** to select **Pan Reverse**.
5. Press **<ENTER>**.
6. Use **<UP>** or **<DOWN>** to select **OFF** (normal pan orientation) or **ON** (reverse pan orientation).
7. Press **<ENTER>**.

Tilt Reverse

To set the tilt orientation on the Sentinel Wash Q120:

1. Press **<MENU>**.
2. Use **<UP>** or **<DOWN>** to select **Setup**.
3. Press **<ENTER>**.
4. Use **<UP>** or **<DOWN>** to select **Tilt Reverse**.
5. Press **<ENTER>**.
6. Use **<UP>** or **<DOWN>** to select **OFF** (normal tilt orientation) or **ON** (reverse tilt orientation).
7. Press **<ENTER>**.

Pan Angle

To set the pan angle range on the Sentinel Wash Q120:

1. Press **<MENU>**.
2. Use **<UP>** or **<DOWN>** to select **Setup**.
3. Press **<ENTER>**.
4. Use **<UP>** or **<DOWN>** to select **Pan Angle**.
5. Press **<ENTER>**.
6. Use **<UP>** or **<DOWN>** to select from **540** (540°), **360** (360°), or **180** (180°).
7. Press **<ENTER>**.

Tilt Angle

To set the tilt angle range on the Sentinel Wash Q120:

1. Press **<MENU>**.
2. Use **<UP>** or **<DOWN>** to select **Setup**.
3. Press **<ENTER>**.
4. Use **<UP>** or **<DOWN>** to select **Tilt Angle**.
5. Press **<ENTER>**.
6. Use **<UP>** or **<DOWN>** to select from **260** (260°), **180** (180°), or **90** (90°).
7. Press **<ENTER>**.

Totem Mode

To activate the Totem mode,:

1. Press **<MENU>**.
2. Use **<UP>** or **<DOWN>** to select **Setup**.
3. Press **<ENTER>**.
4. Use **<UP>** or **<DOWN>** to select **Totem Mode**.
5. Press **<ENTER>**.
6. Use **<UP>** or **<DOWN>** to select **OFF** (normal range of motion) or **ON** (restricted tilt range).
7. Press **<ENTER>**.

Signal Loss

To control what happens when signal is lost to the Sentinel Wash Q120:

1. Press **<MENU>**.
2. Use **<UP>** or **<DOWN>** to select **Setup**.
3. Press **<ENTER>**.
4. Use **<UP>** or **<DOWN>** to select **Signal Loss**.
5. Press **<ENTER>**.
6. Use **<UP>** or **<DOWN>** to select **HOLD** (hold last setting), **CLEAR** (black out fixture), **SOUND** (set to sound-active mode) or **AUTO** (set to auto program).
7. Press **<ENTER>**.

Reset

To reset all functions on the Sentinel Wash Q120:

1. Press **<MENU>**.
2. Use **<UP>** or **<DOWN>** to select **Setup**.
3. Press **<ENTER>**.
4. Use **<UP>** or **<DOWN>** to select **Reset**.
5. Press **<ENTER>**.

Factory Reset

To restore the Sentinel Wash Q120 to factory default settings:

1. Press **<MENU>**.
2. Use **<UP>** or **<DOWN>** to select **Setup**.
3. Press **<ENTER>**.
4. Use **<UP>** or **<DOWN>** to select **Factory Set**.
5. Press **<ENTER>**.

System Information

To view the system information on the Sentinel Wash Q120:

1. Press **<MENU>**.
2. Use **<UP>** or **<DOWN>** to select **Sys Info**.
3. Press **<ENTER>**

IRC-6 Infrared Remote Control

The Sentinel Wash Q120 is compatible with the IRC-6 infrared remote control from Chauvet.
To enable or disable IRC-6 functionality, do the following:

1. Press **<MENU>**
2. Use **<UP>** or **<DOWN>** to select **Run Mode**.
3. Press **<ENTER>**.
4. Press **<UP>** or **<DOWN>** to select **IR**.
5. Press **<ENTER>**.

Consult the table below to operate the Sentinel Wash Q120 with the IRC-6.

IRC-6	Button	Function
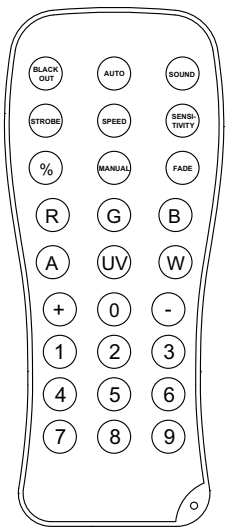	**<AUTO>**	Press to activate automatic mode, then use **<+>** or **<->** to select a program
	<SPEED>	Press then use **<+>** or **<->** to increase or decrease speed
	<SOUND>	Press to activate sound-active mode, then use **<+>** or **<->** to select a program
	<SENSITIVITY	Press then use **<+>** or **<->** to increase or decrease sensitivity
	<STROBE>	Press to toggle strobe, then use **<+>** or **<->** to increase or decrease strobe speed
	<%>	Press then use **<+>** or **<->** to increase or decrease the dimmer
	<FADE>	Press to activate fade mode, then use **<+>** or **<->** to select a fading program
	<MANUAL>	Press to enable manual color control
	<R>	Press then use **<+>** or **<->** to increase or decrease the red value
	<G>	Press then use **<+>** or **<->** to increase or decrease the green value
	<B>	Press then use **<+>** or **<->** to increase or decrease the blue value
	<A>	Press then use **<+>** or **<->** to increase or decrease the amber value
	<UV>	Press then use **<+>** or **<->** to increase or decrease the UV value
	<W>	Press then use **<+>** or **<->** to increase or decrease the white value
	<+>	Press to increase speed, sensitivity, or the dimmer/color value, or to scroll up the list of programs
	<->	Press to decrease speed, sensitivity, or the dimmer/color value, or to scroll down the list of programs
	<0>–<9>	Press to select a preset static color
	<BLACK OUT>	Press to turn off all the lights until the button is pressed again. NOTE: The IRC-6 will not respond to any inputs when Black Out is activated. If the product does not respond when a button is pressed, try pressing **<BLACK OUT>**. Black Out may have been activated.

- **Any setting on the IRC-6 will be saved until the system is rebooted. The system will revert to Auto Mode after reboot.**
- **The buttons on the IRC-6 not listed above are reserved for future use.**

Wired Master/Slave Mode

The Master/Slave mode allows a single Sentinel Wash Q120 product (the “master”) to control the actions of one or more Sentinel Wash Q120 products (the “slaves”) without the need of a DMX controller. The master product will be set to operate in either standalone mode or with the IRC-6, while the slave products will be set to operate in slave mode. Once set and connected, the slave products will operate in unison with the master product.

Configure the products as indicated below.

Slave products:

1. Press **<MENU>** repeatedly until **Run Mode** shows on the display.
2. Press **<ENTER>**.
3. Use **<UP>** or **<DOWN>** to until **Slave** shows on the display.
4. Press **<ENTER>**.
5. Connect the DMX input of the first slave product to the DMX output of the master product.
6. Connect the DMX input of the subsequent slave products to the DMX output of the previous slave product.
7. Finish setting and connecting all the slave products.

Master product:

1. Set the master product to operate in standalone mode or with the IRC-6.
2. Make the master product the first product in the DMX daisy chain.

- **Configure all the slave products before connecting the master to the daisy chain.**
- **Never connect a DMX controller to a DMX string configured for Master/Slave operation because the controller may interfere with the signals from the master.**
- **Do not connect more than 31 slaves to the master.**

5. Maintenance

Product Maintenance

Dust build-up reduces light output performance and can cause overheating. This can lead to reduction of the light source's life and/or mechanical wear. To maintain optimum performance and minimize wear, clean all lighting products at least twice a month. However, be aware that usage and environmental conditions could be contributing factors to increase the cleaning frequency.

To clean the product, follow the instructions below:

1. Unplug the product from power.
2. Wait until the product is at room temperature.
3. Use a vacuum (or dry compressed air) and a soft brush to remove dust collected on the external surface/vents.
4. Clean all transparent surfaces with a mild soap solution, ammonia-free glass cleaner, or isopropyl alcohol.
5. Apply the solution directly to a soft, lint free cotton cloth or a lens cleaning tissue.
6. Softly drag any dirt or grime to the outside of the transparent surface.
7. Gently polish the transparent surfaces until they are free of haze and lint.

Always dry the transparent surfaces carefully after cleaning them.

Do not spin the cooling fans using compressed air because they could be damaged.

6. Technical Specifications

Dimensions and Weight

Length	Width	Height	Weight
8.26 in (219 mm)	5.6 in (5.6 mm)	11.7 in (296.25 mm)	7.8 lb (3.5 kg)

Note: Dimensions in inches are rounded.

Power

Power Supply Type	Range	Voltage Selection
Switching (internal)	100 to 240 VAC, 50/60 Hz	Auto-ranging

Parameter	120 V, 60 Hz	230 V, 50 Hz
Consumption	152 W	148 W
Operating Current	2.2 A	1.4 A
Power linking current (products)	8 A (3 products)	8 A (5 products)
Fuse	F3 A, 250 V	F3 A, 250 V

Power I/O	U.S./Worldwide	UK/Europe
Power input connector	IEC	IEC
Power output connector	Edison	IEC
Power cable plug	Edison (U.S.)	Local Plug

Light Source

Type	Color	Quantity	Power	Current	Lifespan
LED	RGBW	1	120 W	3.6 A	50,000 hours

Photometrics

Strobe Rate	Coverage Angle	Illuminance @2m	Lumens
0 to 20 Hz	16°	8,710 lux	4,189

Movement

Pan	Tilt	Pan Ranges	Tilt Ranges
540°	260°	180°, 360°, and 540°	90°, 180°, and 260°

Thermal

Maximum External Temperature	Cooling System
104 °F (40 °C)	Fan-assisted Convection

DMX

I/O Connector	Channel Range
3-pin XLR	10 or 14

Ordering

Product Name	Item Code	UPC Number
Sentinel Wash Q120	07012694	781462230425

RoHS

Contact Us

General Information	Technical Support
Chauvet World Headquarters	
Address: 3360 Davie Rd., Suite 509 Davie, FL 33314 Voice: (954) 577-4455 Fax: (954) 929-5560 Toll Free: (800) 762-1084	Voice: (844) 393-7575 Fax: (954) 756-8015 Email: chauvetcs@chauvetlighting.com Website: www.chauvetdj.com
Chauvet U.K.	
Address: Pod 1 EVO Park Little Oak Drive, Sherwood Park Nottinghamshire, NG15 0EB UK Voice: +44 (0) 1773 511115 Fax: +44 (0) 1773 511110	Email: UKtech@chauvetlighting.eu Website: www.chauvetdj.eu
Chauvet Benelux	
Address: Vaartlaan 9 9800 Deinze Belgium Voice: +32 9 388 93 97	Email: BNLtech@chauvetlighting.eu Website: www.chauvetdj.eu
Chauvet France	
Address: 3, Rue Ampère 91380 Chilly-Mazarin France Voice: +33 1 78 85 33 59	Email: FRtech@chauvetlighting.fr Website: www.chauvetdj.eu
Chauvet Germany	
Address: Bruno-Bürgel-Str. 11 28759 Bremen Germany Voice: +49 421 62 60 20	Email: DEtech@chauvetlighting.de Website: www.chauvetdj.eu
Chauvet Mexico	
Address: Av. de las Partidas 34 - 3B (Entrance by Calle 2) Zona Industrial Lerma Lerma, Edo. de México, CP 52000 Voice: +52 (728) 690-2010	Email: servicio@chauvet.com.mx Website: www.chauvetdj.mx

Warranty & Returns

For warranty terms and conditions and return information, please visit our website.
For customers in the United States and Mexico: www.chauvetlighting.com/warranty-registration.
For customers in the United Kingdom, Republic of Ireland, Belgium, the Netherlands, Luxembourg, France, and Germany: www.chauvetlighting.eu/warranty-registration.