McGrey MED-200 Mesh Electronic Drum Set



User Manual

Version 04.2026

This user manual is protected by copyright. Reproduction of this user manual, even in part, is permitted only with the authorization of Musikhaus Kirstein GmbH. The same applies to the reproduction or copying of images, even in modified form.

Contents

Setup 6

Included Components 6

Rack System Assembly 7

Attaching Drum Pads, Cymbal Pads and Module 9

Component Wiring 10

Drum Module 11

Module Controls 11

Module Connections 12

Basic Operation 13

Powering On 13

Turning Off 13

Playing the drums 13

Selecting a drum kit 13

Metronome Function 13

Reverb Function 14

Playing with a Song 14

Recording and Playback 14

Bluetooth Audio Function 15

Appendix 16

Technical Specifications 16

List of Drum Kits 16

Thank you for choosing this product.
To ensure that you are completely satisfied with this product, please read and Understand this user manual carefully before using our product. Keep this user manual in a safe place. The user manual must be passed on to all subsequent users.



Follow the user manual!

⚠ WARNING The signal word WARNING indicates hazards that can lead to serious injury if precautions are not taken.

⚠ NOTE The signal word NOTE indicates general precautions that should be observed when handling the product.

⚠ NOTE Images and screen displays in this user manual may differ slightly from the actual product's appearance, provided this does not adversely affect the product's technical characteristics or safety.

⚠ NOTE All personal pronouns in this user manual are to be considered gender-neutral.

This user manual is intended for persons who are supervised by a person responsible for their safety or who have been instructed in the operation of the device and have demonstrated their ability to handle the device.

All information in this user manual has been checked to the best of our knowledge and belief. However, neither the author nor the publisher can be held liable for any damages arising from the use of this user manual.

Other product, brand, and company names mentioned in this document may be trademarks of their respective owners. Compliance with all applicable copyright laws is the responsibility of the user of this document.

Intended Use

⚠ WARNING

- Use the product only in accordance with the instructions provided here. Failure to follow these instructions will void the warranty! Musikhaus Kirstein GmbH assumes no liability for any resulting damage.
- Unauthorized alterations or modifications to the product are not permitted for safety reasons and will also void the warranty.
- Do not open or modify the device or the power supply.
- Ensure that the installation complies with the standards and regulations applicable in your country.
- This product is intended for indoor use only.
- Never use or store the device in locations exposed to extreme or humid temperatures or rain.
- Inspect the item for any damage before use.
- Installation is permitted only on a stable and solid surface. A suitable base may be required.
- Do not place any open light sources (candles, etc.) on or next to the product.
- Operate the product only from a grounded electrical outlet.
- Do not allow liquids or moisture to enter the housing.
- Unplug the device from the power supply when not in use.
- Disconnect the device from the power supply during a thunderstorm.
- The device contains no user-serviceable parts. Always consult appropriately trained technical personnel for this purpose.
- Route the power cord so that people cannot trip over it.
- Turn the volume control to the lowest setting before turning on the device.
- Use only the power adapter supplied with the device. Also, make sure that the mains voltage matches the input voltage specified on the AC adapter's housing. Other adapters may have a different polarity or be rated for a different voltage, so using them could result in damage, malfunction, or electric shock.
- Use only the power cord supplied with the device. The supplied power cord must not be used with other devices. Do not twist the power cord excessively or place heavy objects on it. This can damage the cord and cause short circuits. Damaged cords pose an increased risk of fire and electric shock.
- This device can be used in combination with an amplifier or headphones that may cause permanent hearing loss. Do not operate the device at an uncomfortable volume for extended periods. If you notice hearing loss or ringing in your ears, stop using the device immediately and consult a doctor.
- Protect the device from strong impacts. Do not drop it.

- Unplug the power adapter at regular intervals and clean it with a dry cloth, removing any dust or dirt buildup from the prongs. Any dust buildup between the power plug and the outlet can lead to poor insulation and a fire.
- Never climb on the device or place heavy objects on it.
- Never touch the power adapter with wet hands when plugging it in or unplugging it. Disconnect the power adapter and all cables from external devices before moving the device.

- Before cleaning the device, turn it off and unplug the power supply from the outlet.
- Do not connect this device to the same outlet used by an electrical appliance controlled by an inverter (e.g., refrigerator, washing machine, microwave) or that contains a motor. Depending on how the electrical appliance is used, power supply noise may cause this device to malfunction or produce audible noise.
- Using the device near power amplifiers or other devices with large power transformers may cause humming.
- To resolve the issue, reposition this device or place it further away from the source of interference. This device may interfere with radio and television reception.
- Interference may occur when wireless communication devices such as mobile phones are operated near this device. Such interference may occur when receiving or making a call, or during a conversation. If such problems occur, move these wireless devices further away from this device or turn them off.
- Do not expose the unit to direct sunlight, place it near devices that emit heat, leave it in a closed vehicle, or otherwise expose it to extreme temperatures. Excessive heat may cause the unit to warp or discolor.
- If the device is moved from one location to another where the temperature and/or humidity differ significantly, water droplets (condensation) may form inside the device. Attempting to use the device in this condition may result in damage or malfunction. Therefore, allow the device to stand for several hours before use until the condensation has completely evaporated.
- For daily cleaning, wipe the device with a soft, dry cloth or one slightly dampened with water. To remove stubborn dirt, use a cloth impregnated with a mild, non-abrasive cleaning agent. Then wipe the device thoroughly with a soft, dry cloth. Never use benzene, thinner, alcohol, or solvents of any kind.

Setup

Included Components

Before assembling the e-drum for the first time, please check that you have received all the necessary components.

A list of the included components can be found here:

Drum Rack (Center) 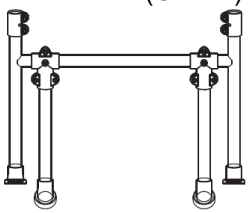	Drum Rack (Left) 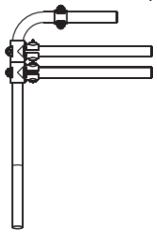	Drum rack (right) 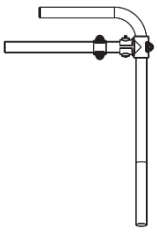
Sound module 	Cable harness 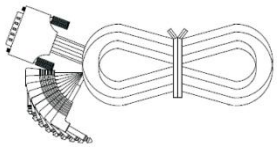	Power Supply 
Drum Pad (4 pieces) 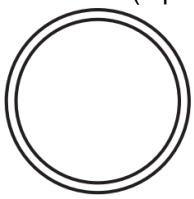	Cymbal Pad (3 pieces) 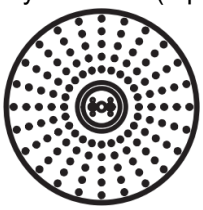	Drum pedal (2 pieces) 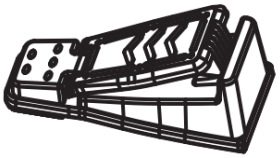
Cymbal holders (3 pieces) 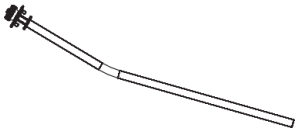	Drum sticks 	Allen wrench 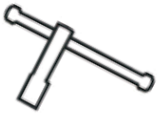

Rack System Assembly

Fold out the center section of the drum rack as shown in the photo below and tighten the screws (1) on the crossbar.

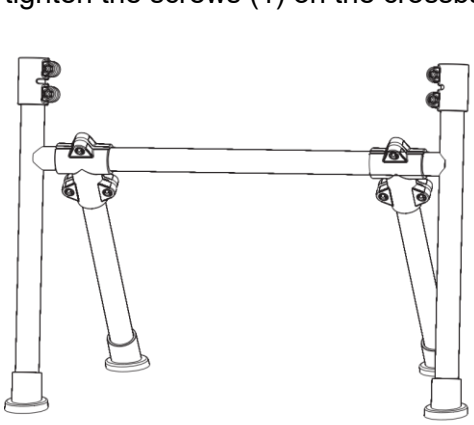

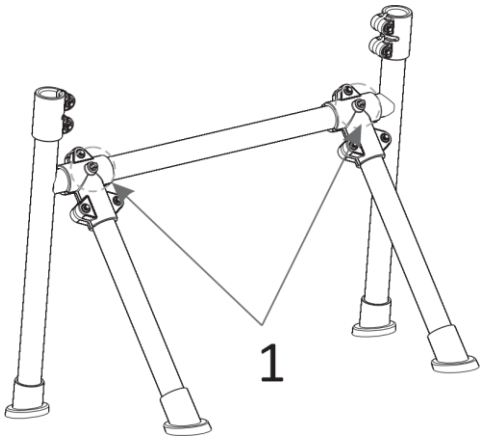

Attach the left and right side panels of the drum rack to the center section as shown in the photo below, and tighten the screws connecting the upper and lower frames (2).

This assembly step determines the final height of the electronic drum set. For shorter players, slide the side panels in as far as possible. For taller players, leave the side panels protruding further. However, height adjustment is still possible later, once the set is fully assembled.

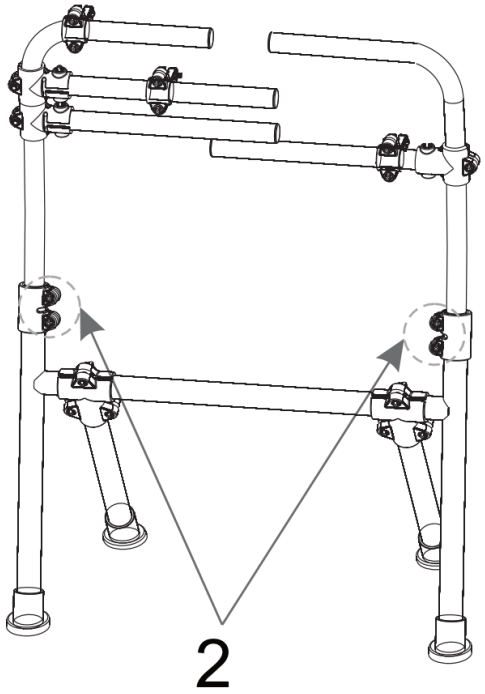

Now rotate the three arms into the correct position and tighten the screws (3). You can still make more precise height adjustments and fine-tune the positioning of the arms later, even after the set is fully assembled.

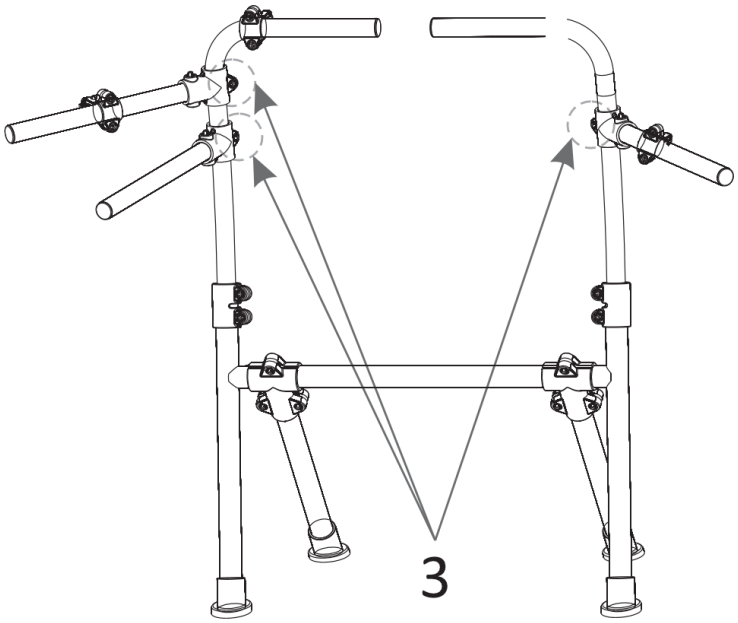

Now attach the cymbal holders to the rack using the designated brackets.

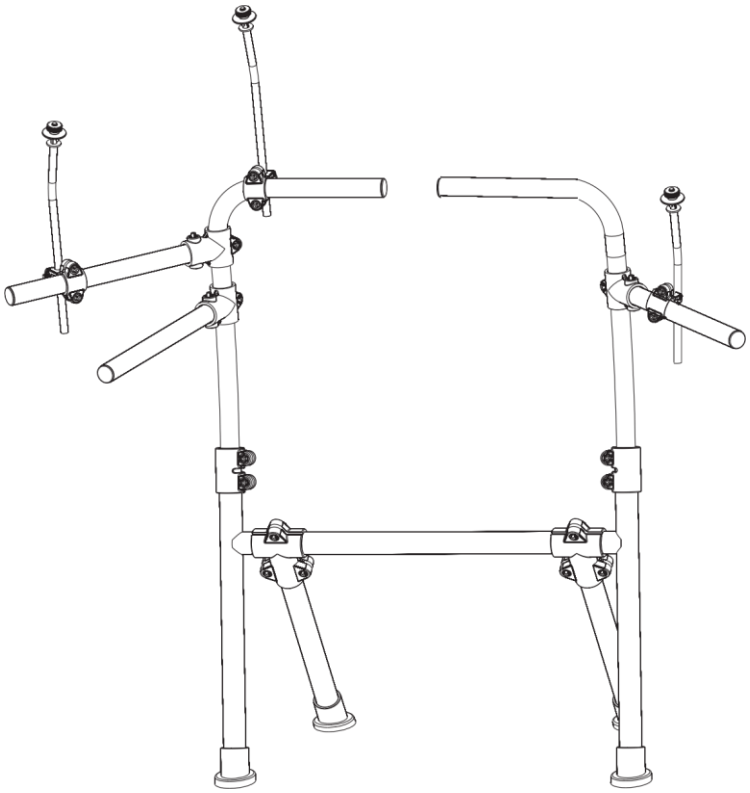

Attaching Drum Pads, Cymbal Pads and Module

Attach the drum pads, cymbal pads, and module in the positions shown below, and position the drum pedals on the floor.

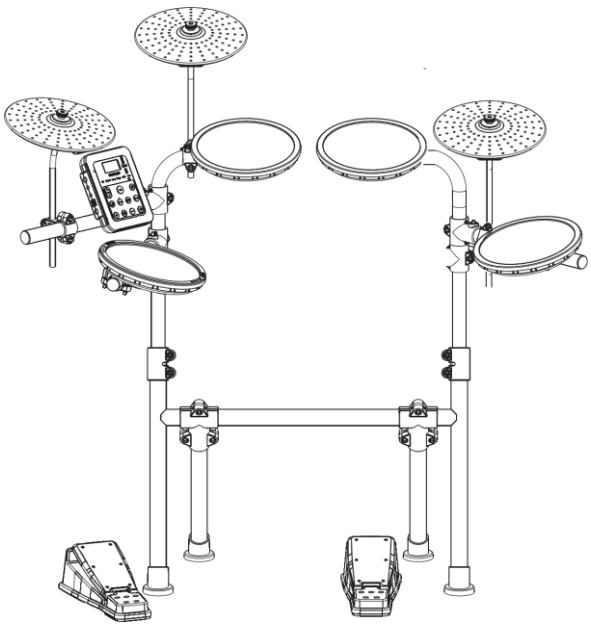

The drum pads are attached to the rack using the brackets.

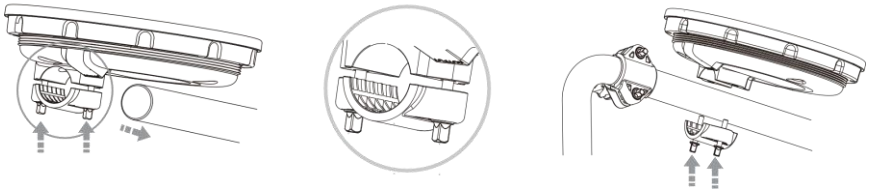

When attaching the cymbal pads, make sure to follow the correct order of the individual parts.

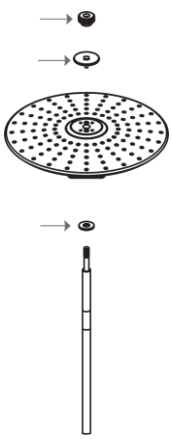

The module is also held in place with a bracket.

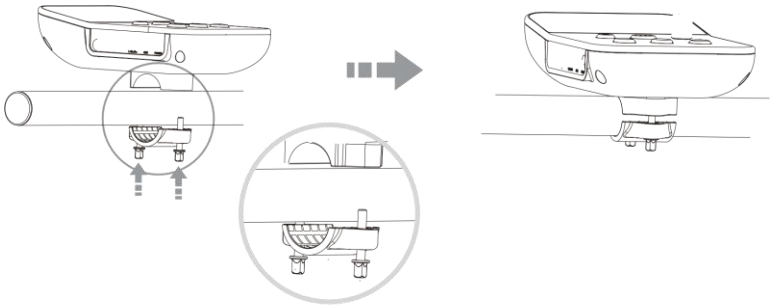

Component Wiring

Connect the multi-pin connector of the cable harness to the jack on the back of the drum module and tighten the locking screws.
The jack plugs on the loose ends are labeled and are connected to the individual components as follows.

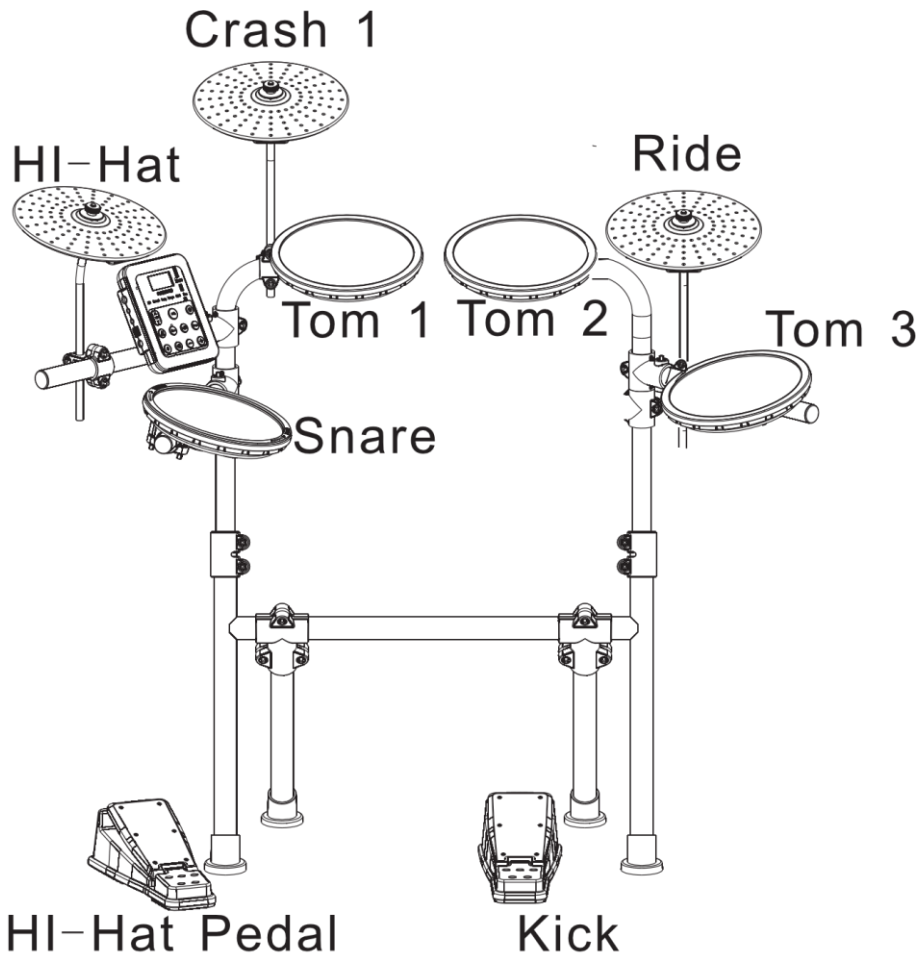

Now adjust the individual rack arms, cymbal arms, and pads, as well as the overall height of the rack, to suit your needs.

Drum Module

Module Controls

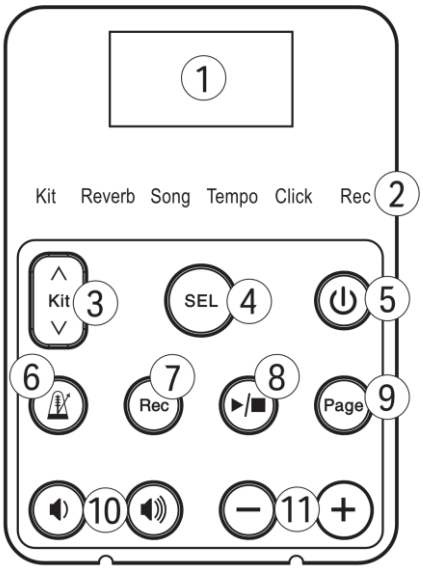

1. Display: For displaying various information.

2. Function Display: Shows which function mode the module is in.

3. Kit Selection button: Use this to select the desired drum kit (sound selection).

4. Select button: For selecting the different function modes.

5. Power Switch: Hold the power button for a few seconds to turn the drum module on or off.

6. Metronome button: Use this button to turn the metronome on or off.

7. Rec button: Use this button to start a recording.

8. Start/Stop button: Use this button to play back the recording**.**

9. Page button: Press and hold this button for three seconds to turn the Bluetooth function on or off. In Song mode, the Page button is used to switch between the volume settings for Song and Drum.

10. Volume buttons: Use these two buttons to increase or decrease the volume.

11. +/- Button: Use these two buttons to adjust various parameters.

Module Connections

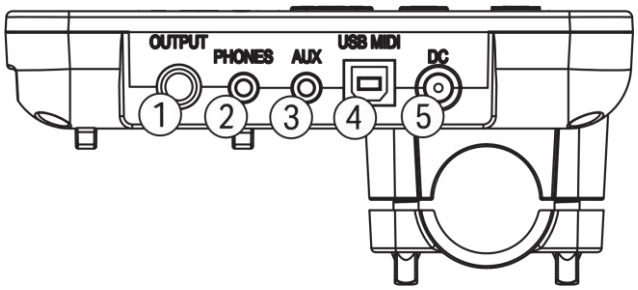

1. Output jack:
Here you can connect an amplifier or external audio devices.

2. Headphone jack:
For quiet practice at home, we recommend using this headphone jack (3.5mm jack). Please note: Sound will continue to be output through the line-out jack even when headphones are connected.

3. AUX jack
Connect your audio player or other audio sources (MP3 or CD player) here. The audio input through this jack is output via the PHONES jack.

4. USB-MIDI jack:
Connect the module to your computer via a USB cable (USB-A to USB-B) to send and receive MIDI data.

5. Power connection (DC 9V):
Connect the included power supply here.

Basic Operation

Powering On

Press the [POWER] button to turn on the device. The LED display shows the number of the current drum kit, and the KIT indicator lights up.

Now put on your headphones, or turn on the amplifier or other connected audio sources.

While gently striking the pads to hear the sound, adjust the volume by pressing the volume buttons in increments.

Turning Off

Turn down the volume on the sound module.

Turn off the connected audio sources, or remove the headphones.

Hold down the [POWER] button until “Power off” appears on the screen.

Playing the drums

Selecting a drum kit

Note: Immediately after powering on, the unit is in Kit mode by default, and the Kit indicator is lit.

If you are in a different mode, use the [SEL] button to select KIT mode.

The drum kit number is displayed on the screen. Press [KIT∧] / [KIT∨] to select a drum kit.

Metronome Function

The drum kit features a metronome whose volume is controlled via the master volume.

Metronome on/off

Press the metronome button to turn on the metronome. When the metronome is on, the click indicator lights up and flashes red and green alternately in time with the current beat.

Press the button again to turn off the metronome.

Changing the Time Signature

In metronome mode, the LED displays the preset time signature; a total of 9 time signatures are available. As long as the time signature is shown on the display, you can change it by pressing the [+]/[-] buttons.
Note: The default setting is 4/4.

Changing the metronome tempo

Use the [SEL] button to switch to tempo mode.

The tempo indicator lights up and the display shows the current tempo value.

Press the [+]/[-] buttons to set the tempo value. Holding down the [+]/[-] buttons allows for faster adjustment.

The tempo range is between 30 bpm and 250 bpm.

In demo mode, the tempo is automatically adjusted to the various demo songs.

Reverb Function

Use the [SEL] button to switch to Reverb mode.

Press the [+]/[-] button to adjust the reverb effect level. There are 16 levels in total. The display shows “000–016,” where “000” means the reverb function is off.

Playing with a Song

Use the [SEL] button to select Song mode; the Song indicator will light up.

Press [+]/[-] to select the desired song; the song number appears on the display.

If you have activated the metronome before starting the song, it will not stop. You can press the [▶/■] button to stop the metronome and the song.

Press the volume buttons during song playback to adjust the overall volume.

You can press the [PAGE] button during song playback to use the [+]/[-] buttons to adjust the volume of the drum part (d00 – d32) and the backing rhythm (A00 – A32) separately.

While songs are playing, use the [SEL] button to select the tempo mode; the tempo indicator will light up. Press the [+]/[-] buttons to adjust the song tempo. The tempo range is between 30 bpm and 250 bpm.

Recording and Playback

Press [Rec] to activate recording mode. The recording indicator lights up. “rEC” appears on the LED display.

Tap any drum pad to start recording. The red LED dot flashes.

Press the [Rec] button again to stop recording; the [Rec] indicator remains lit but no longer flashes.

Press [▶ ■] to play back the recording.

Playback stops automatically at the end of the recording.

To stop playback, press [▶/■].

To exit the recording function, press the [SEL] button and switch to another mode.

Note: You can turn on the metronome during recording, but the metronome sound will not be recorded.

Note: Sound played through the Aux jack or the Bluetooth function is not recorded.

Bluetooth Audio Function

To activate Bluetooth audio, press and hold the [Page] button for 3 seconds; the display will show “bON”.

The drum set will appear as “EDRUM” on your mobile device.

To disable Bluetooth audio, press and hold the [Page] button again for 3 seconds; the display will show “bOF”.

Appendix

Technical Specifications

Songs	20
Preset Kits	12
Sounds	122
DSP Effects	Reverb
Tempo	20–250 BPM
Power Supply	9V, 500mA, positive inside
Connections	USB-MIDI, Aux, Headphones, Output

List of Drum Kits

Number	Name	Number	Name
1	Universal	7	Latin
2	Pop	8	Jazz
3	Rock1	9	Electronic
4	Rock2	10	Dance
5	Funk	11	Percussion
6	Metal	12	Fun

WEEE Declaration
(Waste Electrical and Electronic Equipment)

Your product was designed and manufactured using high-quality materials and components that are recyclable and reusable. This symbol indicates that electrical and electronic equipment must be disposed of separately from household waste at the end of its useful life.

Please dispose of this device at your local municipal collection point or recycling center.

Please help protect the environment in which we all live.

All technical data and product images are subject to change without notice. All information was correct at the time of printing. Musikhaus Kirstein GmbH assumes no liability for the accuracy or completeness of the descriptions, photos, or statements contained in this manual. Printed colors and specifications may differ slightly from the product. Products from Musikhaus Kirstein GmbH are sold exclusively through authorized dealers. Distributors and dealers are not representatives of Musikhaus Kirstein GmbH and are not authorized to legally bind Musikhaus Kirstein GmbH in any way, whether expressly or by implication.

SIMPLIFIED EU DECLARATION OF CONFORMITY
Musikhaus Kirstein GmbH hereby declares that the radio equipment type complies with Directive 2014/53/EU.
The full text of the EU Declaration of Conformity is available at the following web address:
http://www.kirstein.de/docs/Konformitaetserklaerung/CE_Konformitaetserklaerung_00120555.pdf

KIRSTEIN.de

Musikhaus Kirstein GmbH

Bernbeurener Str. 11

86956 Schongau – Germany

Phone: 0049-8861-909494-0

Email: info@kirstein.de

